SKILLING, HELLE, CHRISTIANSEN, ROBERTSON — Structural & Civil Engineers

PROJECT THE WORLD TRADE CENTER | TITLE SECTIONS AT EL. 290'-0" | DATE 1-16-70

REVISIONS

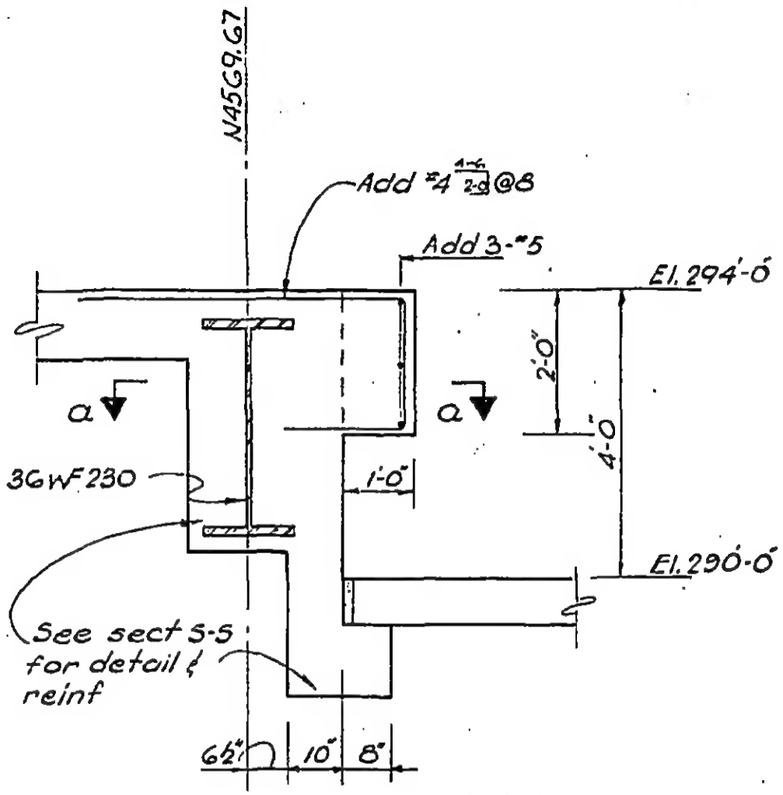

SECTION W-W
(½" = 1'-0")

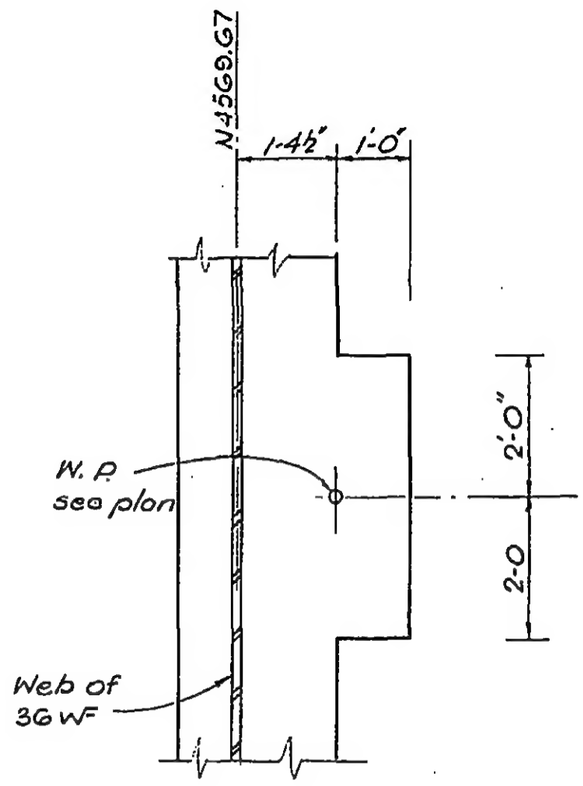

SECTION 0-0
(½" = 1'-0")

LICENSED PROFESSIONAL ENGINEER
LESLIE E. ROBERTSON
No. 34360
UNIVERSITY OF THE STATE OF NEW YORK

DESIGNED

DRAWN D.C. Huggins

REVIEWED E.L.

8-JK 50.14
JKB

WTC-1066-L, 3

SKILLING, HELLE, CHRISTIANSEN, ROBERTSON — Structural & Civil Engineers

PROJECT THE WORLD TRADE CENTER | TITLE DETAIL OF CONCRETE SUPPORT FOR 24"ϕ STEAM MAIN | DATE 1-27-70

REVISIONS

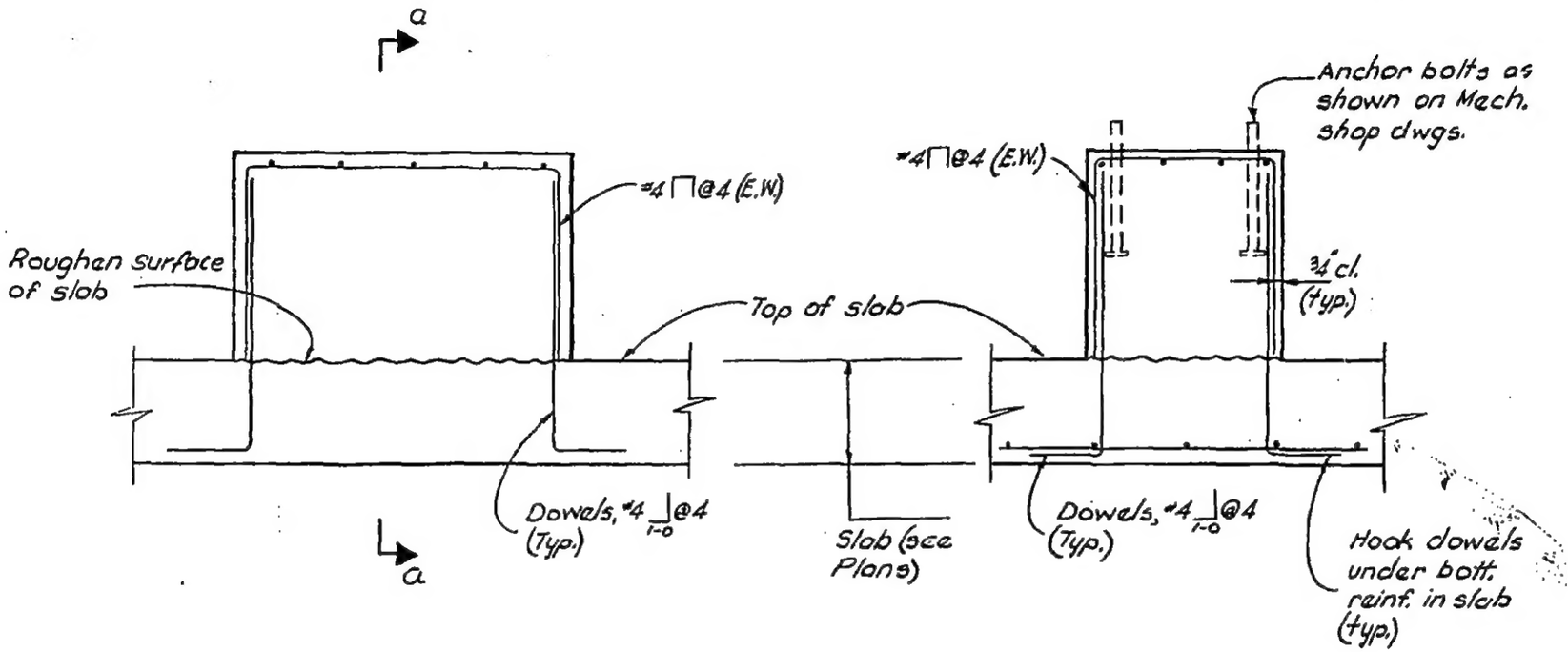

SECTION X-X
NO SCALE

SECTION a-a
NO SCALE

Notes
1. All conc. to be f'c = 3000 psi.
2. See Mech. shop Dwgs. (Sond-Courter Dwg. P-14) for dimensions of conc. supports

LICENSED PROFESSIONAL ENGINEER — LESLIE E. ROBERTSON — No 34360 — UNIVERSITY OF THE STATE OF NEW YORK

DESIGNED

DRAWN D. Huggins

REVIEWED E.L.

8-SK8-50.15

SKILLING, HELLE, CHRISTIANSEN, ROBERTSON — Structural & Civil Engineers

PROJECT: THE WORLD TRADE CENTER | TITLE: SECTION AT EL. 274'-0" | DATE: 1-31-69

REVISIONS

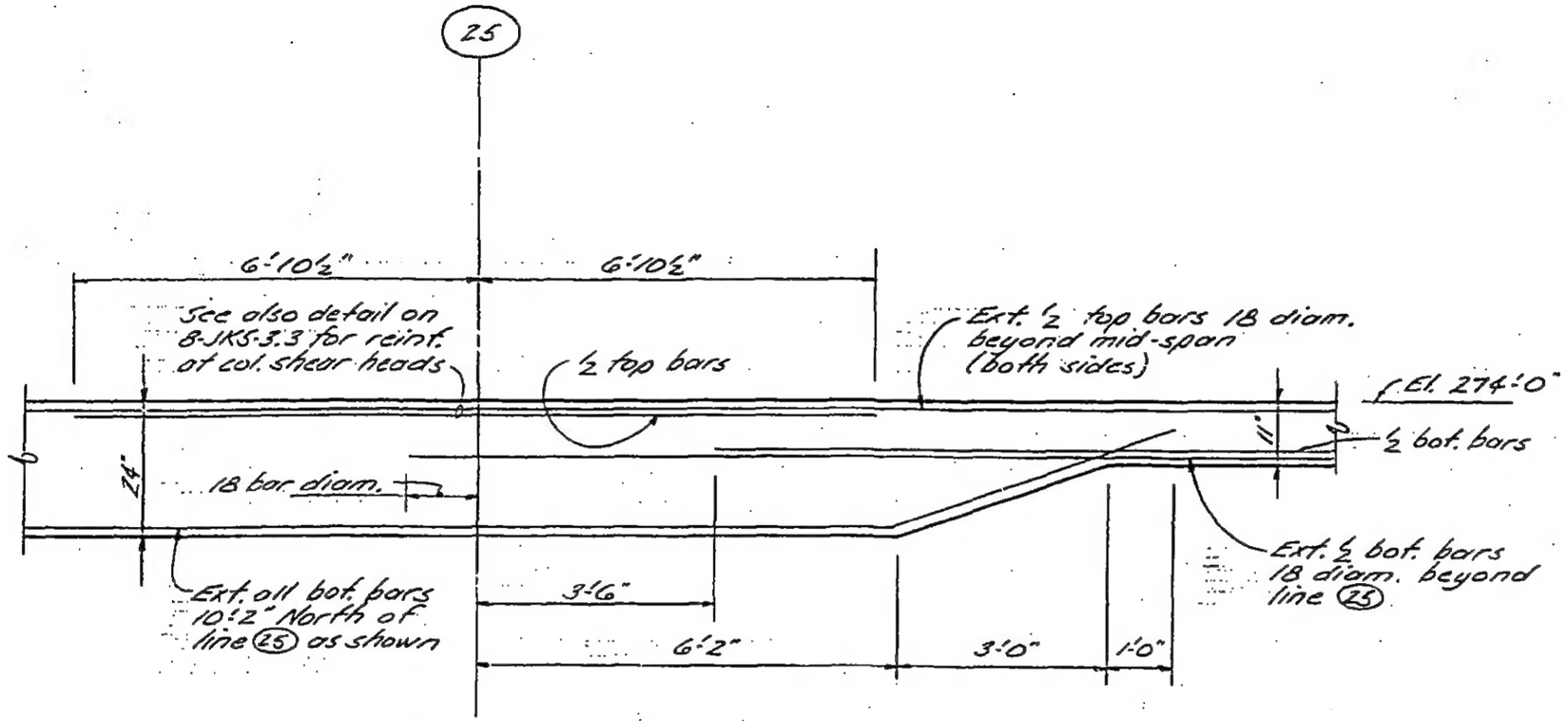

(This section applies to both column and middle strips)

Section A-A

LICENSED PROFESSIONAL ENGINEER — LESLIE E. ROBERTSON — No. 34350 — UNIVERSITY OF THE STATE OF NEW YORK

DESIGNED

DRAWN: J. Adams

REVIEWED: E.L.

B-JKB-51.1

SKILLING, HELLE, CHRISTIANSEN, ROBERTSON — Structural & Civil Engineers

PROJECT: THE WORLD TRADE CENTER | TITLE: SECTION AT ELEV. 274 | DATE: 4-2-69

REVISIONS

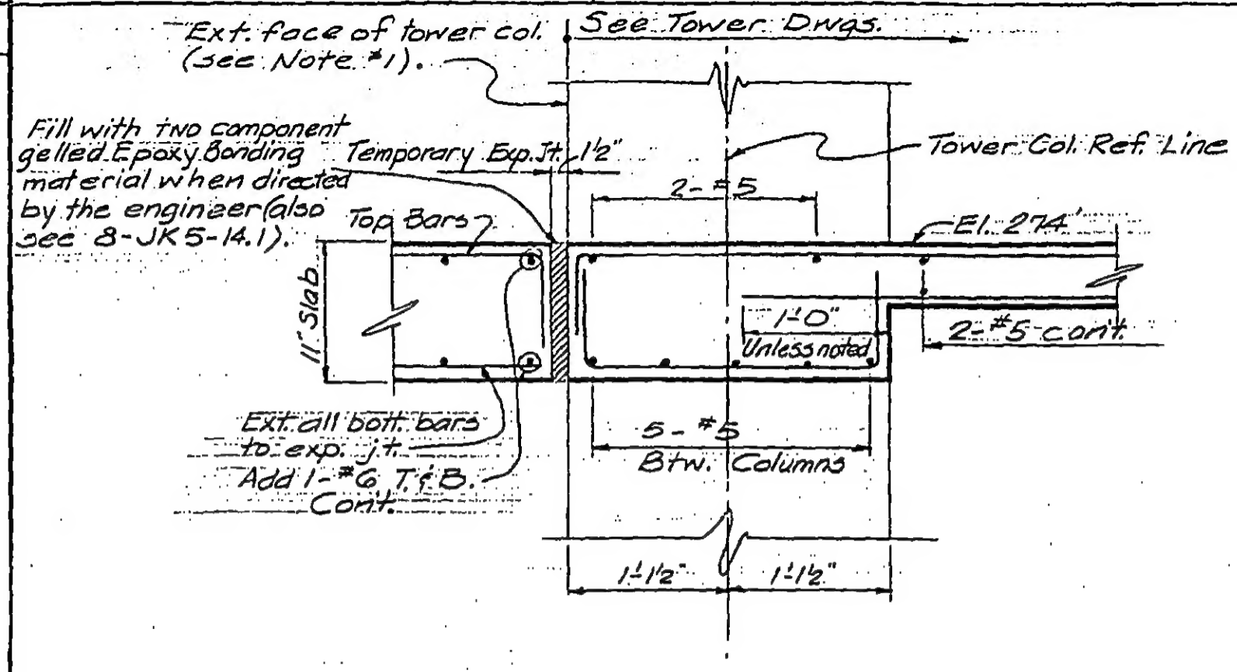

Section B-B

(SCJ-55)

NOTES:

1) Where Tower Diagonal-Plates occur, ½" joint shall be provided on all three sides of such plates.
2) See also 8-JK5-14.1.

LICENSED PROFESSIONAL ENGINEER — LESLIE E. ROBERTSON — No. 34360 — UNIVERSITY OF THE STATE OF NEW YORK

DESIGNED

DRAWN G.S.

REVIEWED E.L.

SKILLING, HELLE, CHRISTIANSEN, ROBERTSON — Structural & Civil Engineers

PROJECT THE WORLD TRADE CENTER | TITLE SECTION AT EL 274'-0" | DATE 4-21-69

REVISIONS

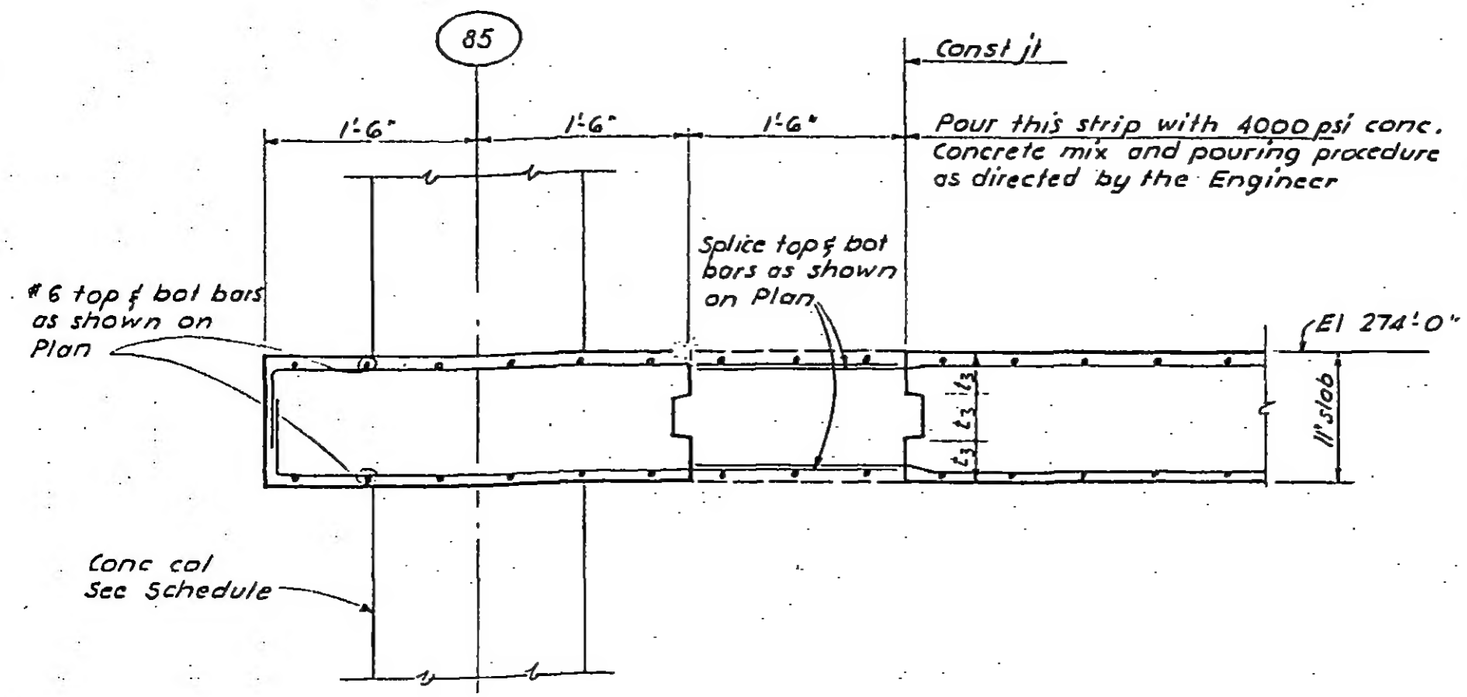

Section C-C

LICENSED PROFESSIONAL ENGINEER
LESLIE E. ROBERTSON
No. 34360
UNIVERSITY OF THE STATE OF NEW YORK

DESIGNED

DRAWN F.C. Smith

REVIEWED E.L.

8-JK8-51.3

SKILLING, HELLE, CHRISTIANSEN, ROBERTSON — Structural & Civil Engineers

PROJECT: THE WORLD TRADE CENTER | TITLE: SECTION AT EL 274'-0" | DATE: 6-27-69

REVISIONS

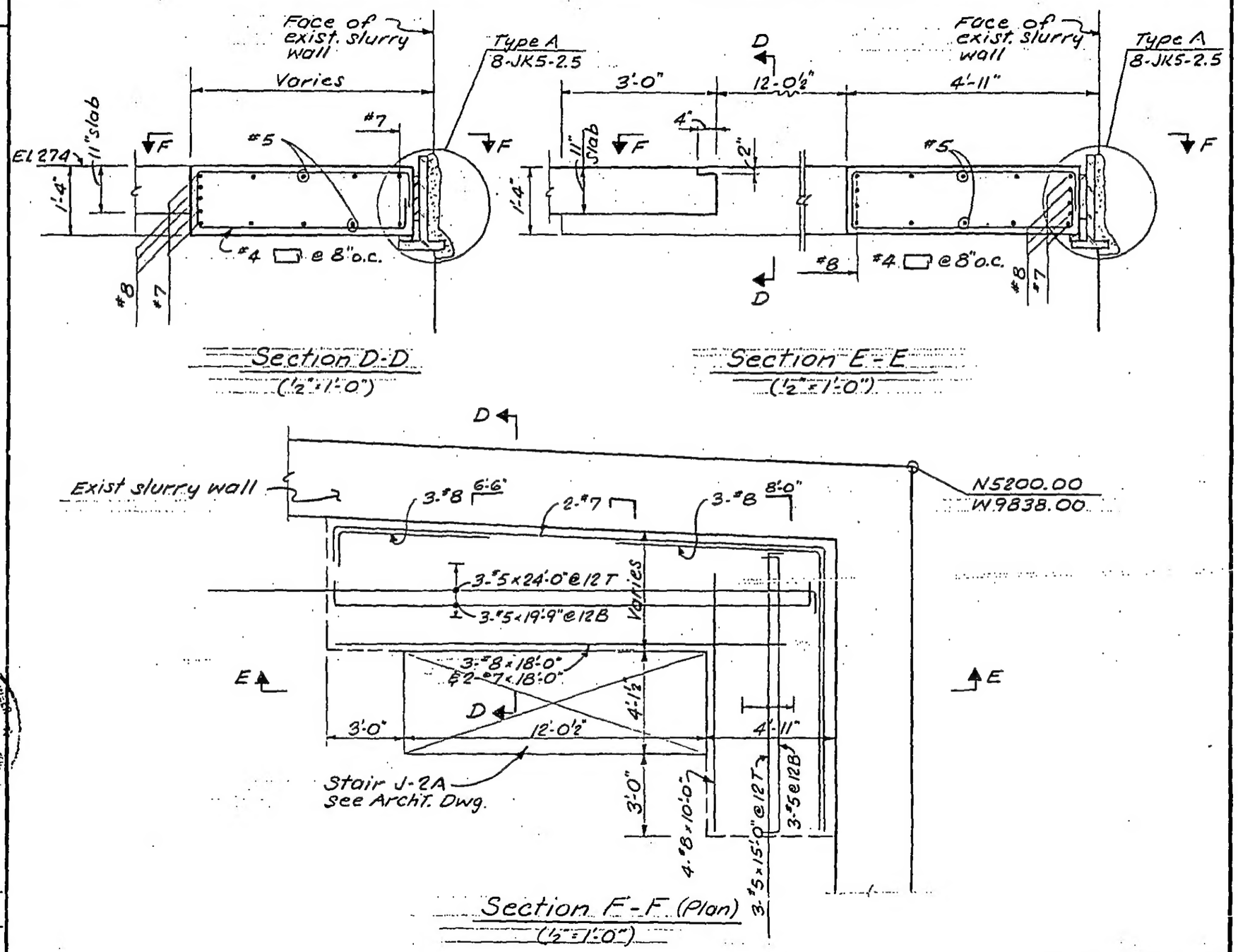

Section D-D (½"=1'-0")

Section E-E (½"=1'-0")

Section F-F (Plan) (½"=1'-0")

LICENSED PROFESSIONAL ENGINEER — LESLIE E. ROBERTSON — UNIVERSITY OF ... — No. 84260

DESIGNED

DRAWN: F. Smith

REVIEWED: E.L.

8-JK8-51.4

SKILLING, HELLE, CHRISTIANSEN, ROBERTSON — Structural & Civil Engineers

PROJECT THE WORLD TRADE CENTER | TITLE SECTION AT EL 274'-0" | DATE 6-27-69

REVISIONS

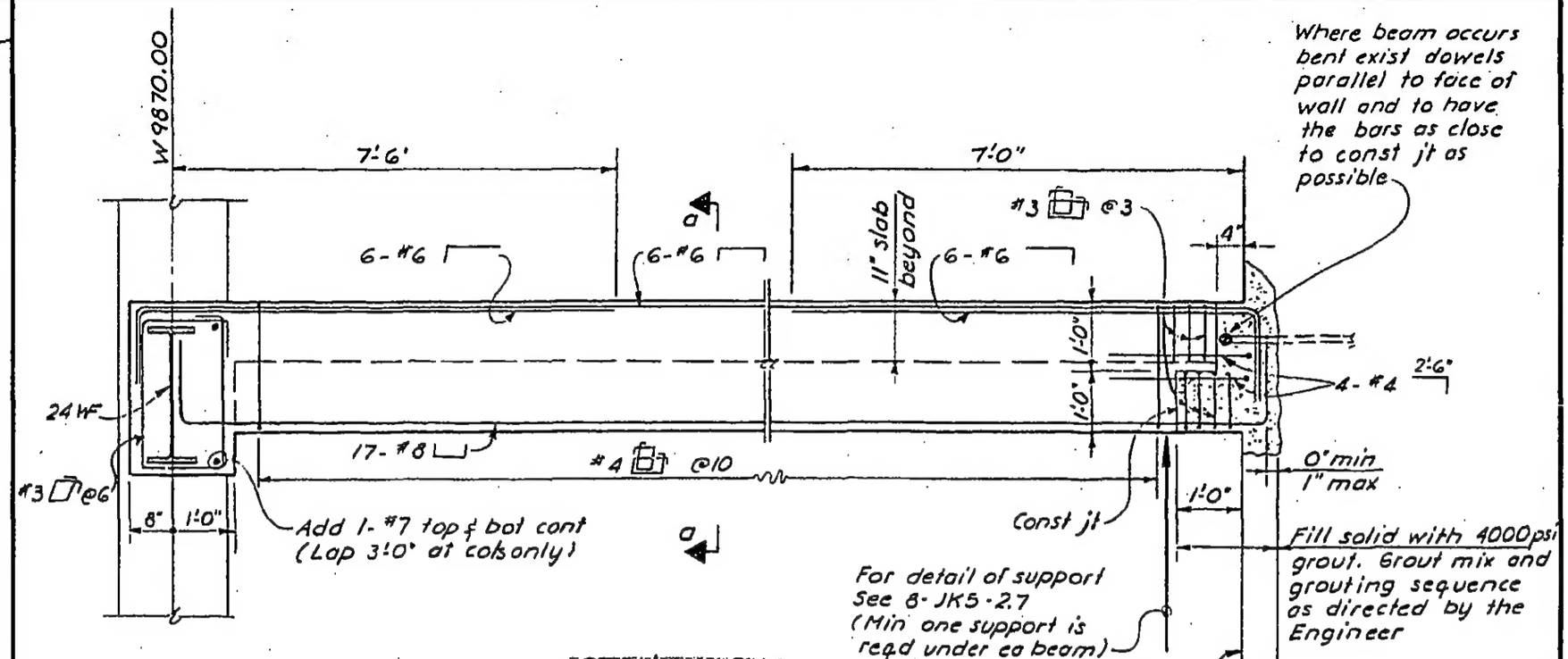

Section 6-6

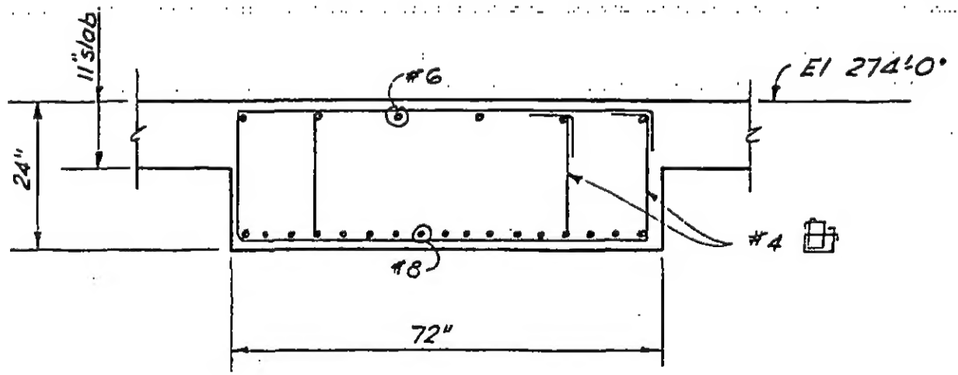

Section a-a

LICENSED PROFESSIONAL ENGINEER — LESLIE E. ROBERTSON — No. 34360 — UNIVERSITY OF

DESIGNED

DRAWN F. Smith

REVIEWED E.L.

8-JK8-51.5

SKILLING, HELLE, CHRISTIANSEN, ROBERTSON — Structural & Civil Engineers

PROJECT: THE WORLD TRADE CENTER | TITLE: SECTION AT EL 274'-0" | DATE: 6-27-69

REVISIONS

9-26-69

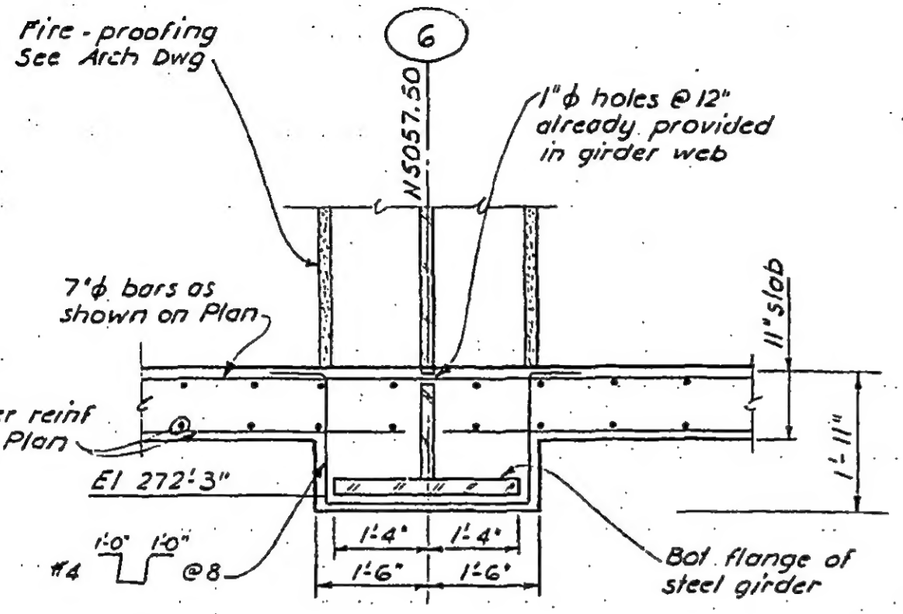

Section H-H
(½" = 1'-0")

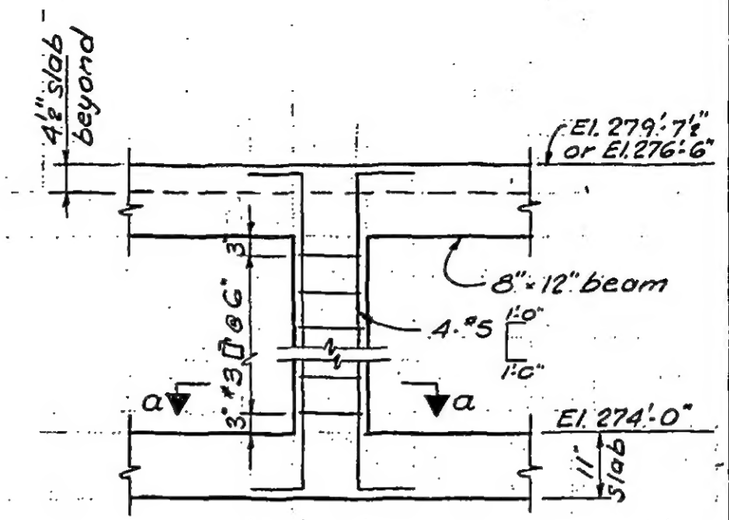

Section J-J
(½" = 1'-0")

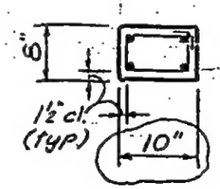

Section a-a
(½" = 1'-0")

LICENSED PROFESSIONAL ENGINEER
LESLIE E. ROBERTSON
No. 34360
UNIVERSITY OF THE STATE OF NEW YORK

DESIGNED

DRAWN: F. Smith

REVIEWED: E.L.

8-JK8-51.6

SKILLING, HELLE, CHRISTIANSEN, ROBERTSON — Structural & Civil Engineers

PROJECT: THE WORLD TRADE CENTER | TITLE: SECTIONS AT EL. 274'-0" | DATE: 7-14-69

REVISIONS

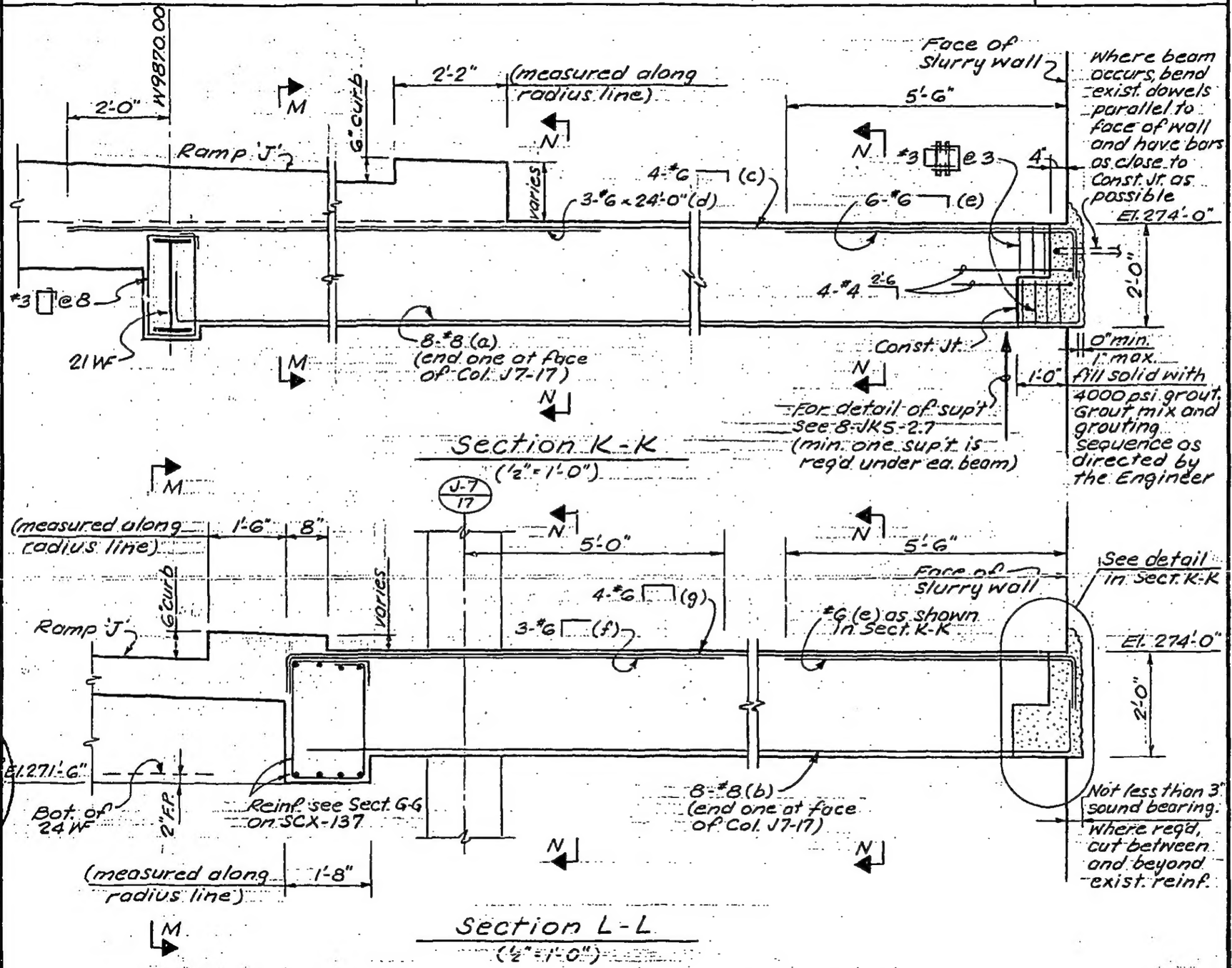

LICENSED PROFESSIONAL ENGINEER — LESLIE E. ROBERTSON — No. 34360 — UNIVERSITY OF THE STATE OF NEW YORK

DESIGNED

DRAWN: S.C.

REVIEWED: E.L.

8-JK8-51.7

SKILLING, HELLE, CHRISTIANSEN, ROBERTSON — Structural & Civil Engineers

PROJECT: THE WORLD TRADE CENTER | TITLE: SECTIONS AT EL. 274'-0" | DATE: 7-14-69

REVISIONS

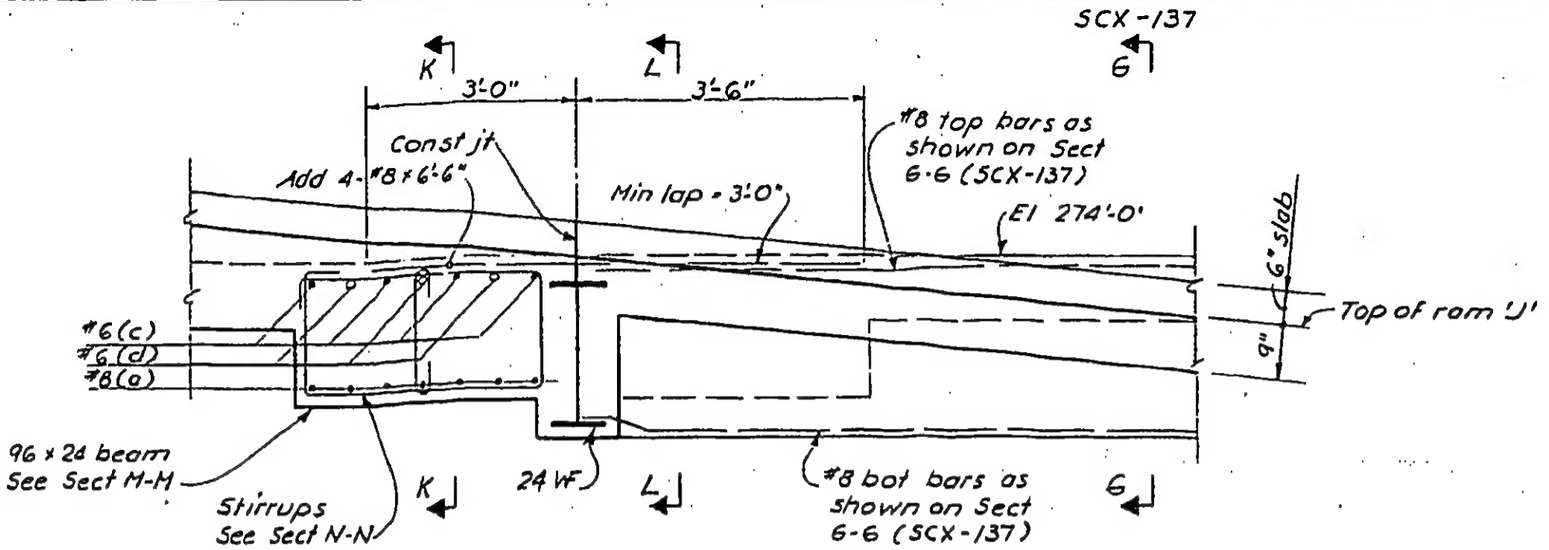

Section M-M
(½" = 1'-0")

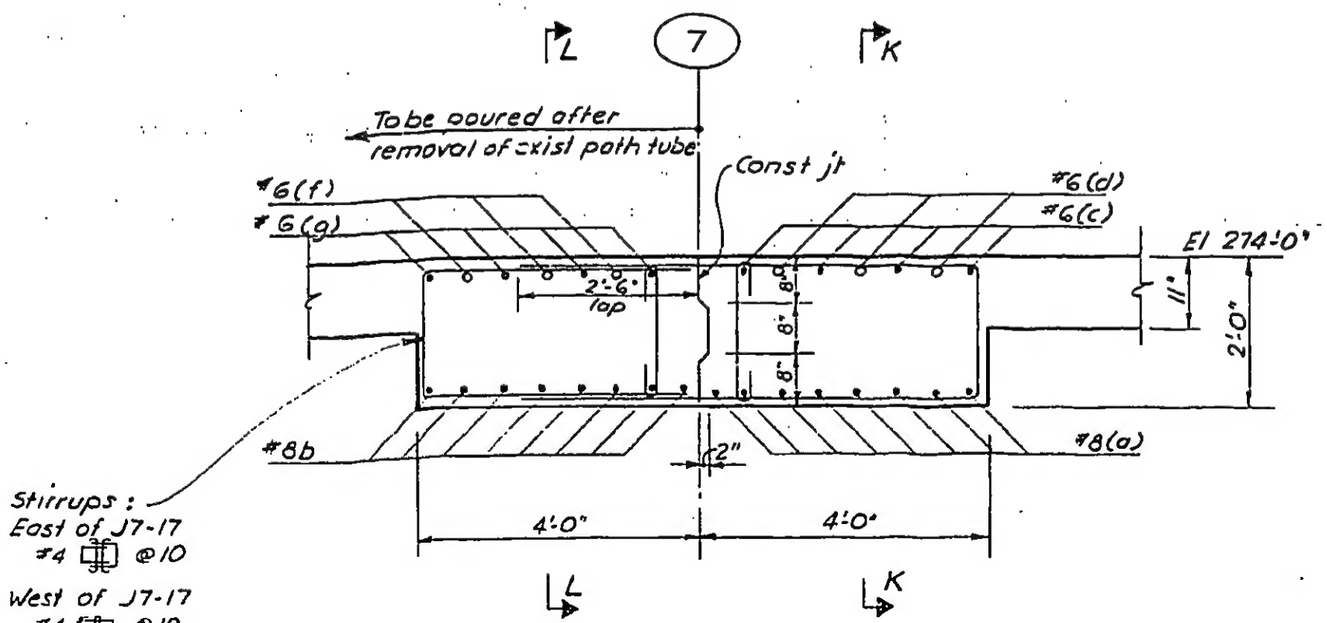

Section N-N
(½" = 1'-0")

LICENSED PROFESSIONAL ENGINEER
LESLIE E. ROBERTSON
No. 34360
UNIVERSITY OF THE STATE OF NEW YORK

DESIGNED /
DRAWN E. Smith
REVIEWED E.L.

8-JK8-51.8

SKILLING, HELLE, CHRISTIANSEN, ROBERTSON — Structural & Civil Engineers

PROJECT THE WORLD TRADE CENTER | TITLE SECTIONS AT EL. 274'-0" | DATE 8-25-69

REVISIONS

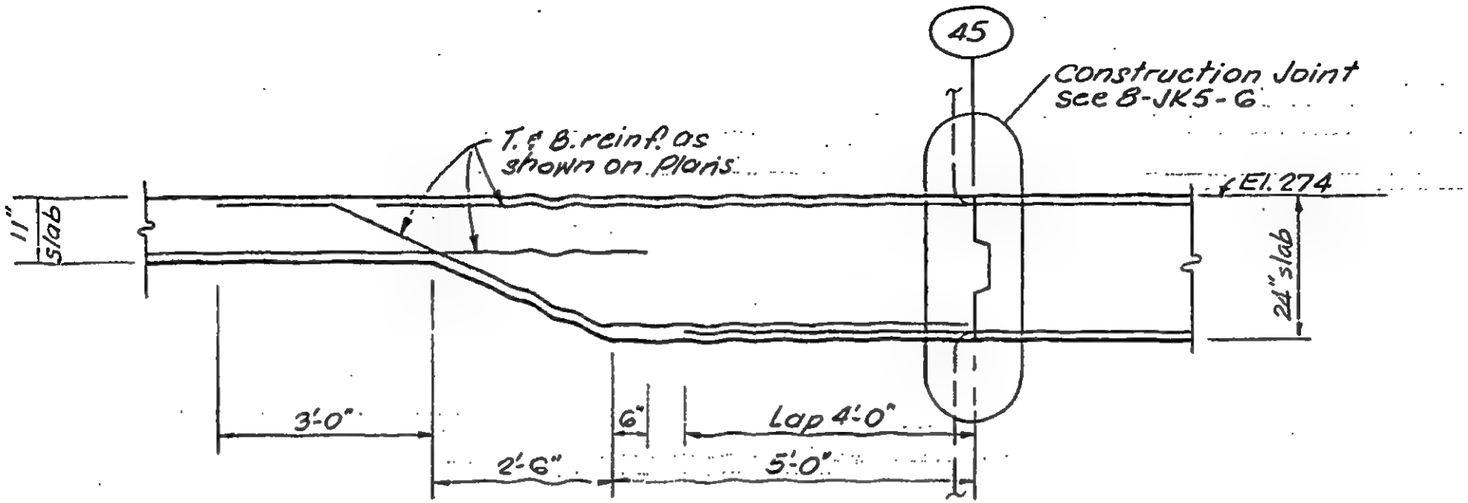

Section P-P
(½" = 1'-0")

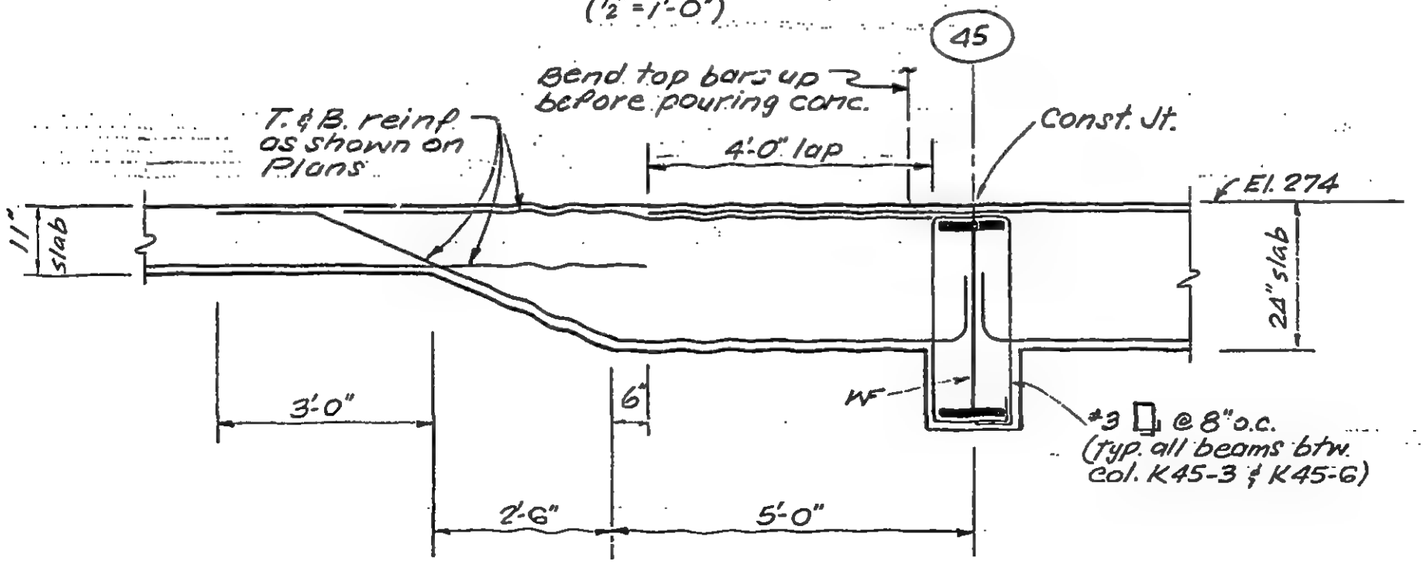

Section Q - Q
(½" = 1'-0")

LICENSED PROFESSIONAL ENGINEER
LESLIE E. ROBERTSON
No. 34360
UNIVERSITY OF THE STATE OF NEW YORK

DESIGNED

DRAWN S.C.

REVIEWED E.L.

8-JK8-51.9

SKILLING, HELLE, CHRISTIANSEN, ROBERTSON — Structural & Civil Engineers

PROJECT THE WORLD TRADE CENTER | TITLE SECTIONS AT EL. 274'-0" | DATE 8-25-69

REVISIONS

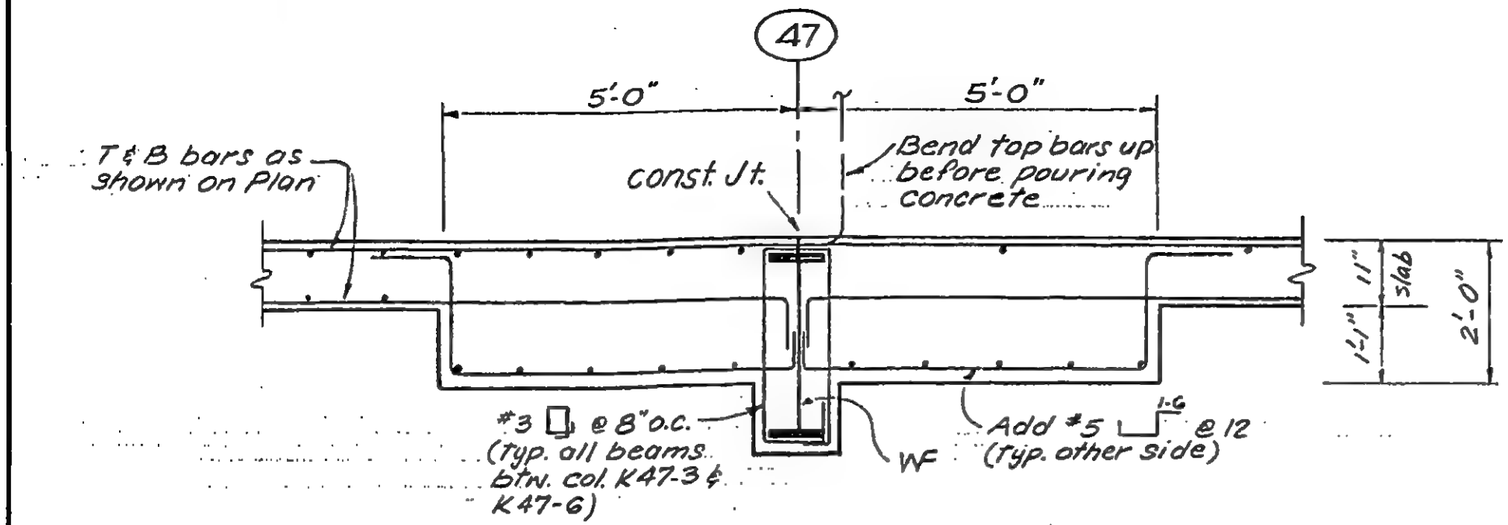

Section R-R
(½" = 1'-0")

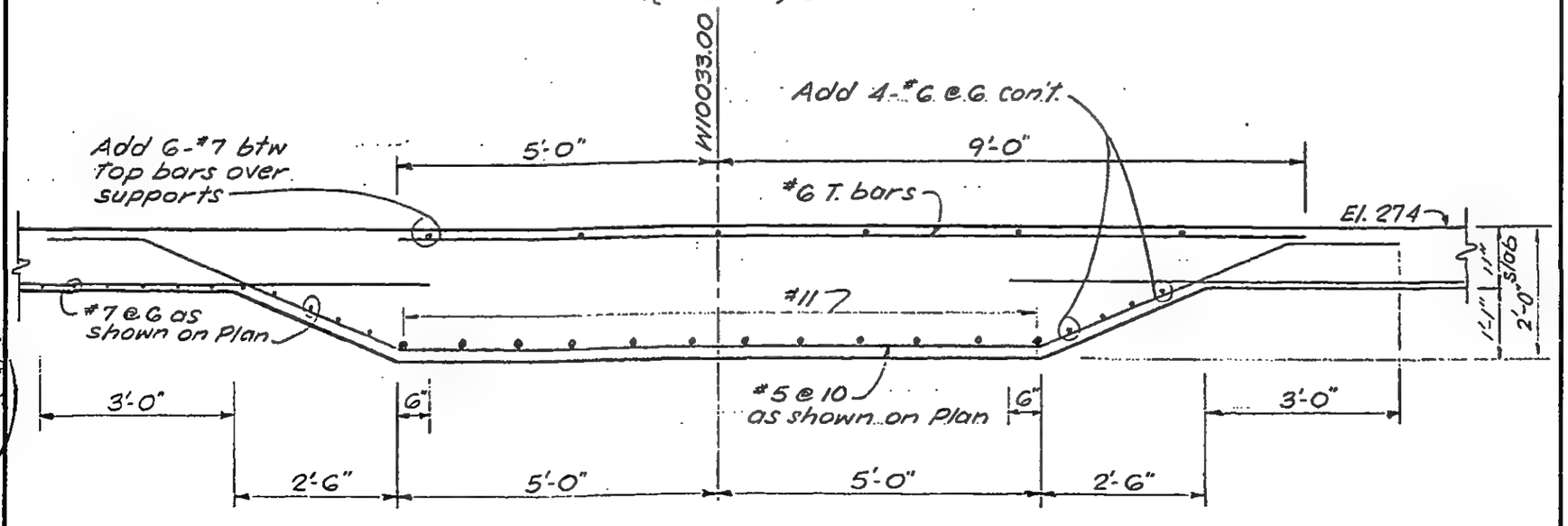

Section S-S
(½"-1'-0")

LICENSED PROFESSIONAL ENGINEER
LESLIE E. ROBERTSON
No. 34360
UNIVERSITY OF THE STATE OF NEW YORK

DESIGNED

DRAWN S.C.

REVIEWED E.L.

8-JK8-51.10

SKILLING, HELLE, CHRISTIANSEN, ROBERTSON — Structural & Civil Engineers

PROJECT: THE WORLD TRADE CENTER | TITLE: SECTIONS AT EL. 274'-0" | DATE: 8-25-69

REVISIONS

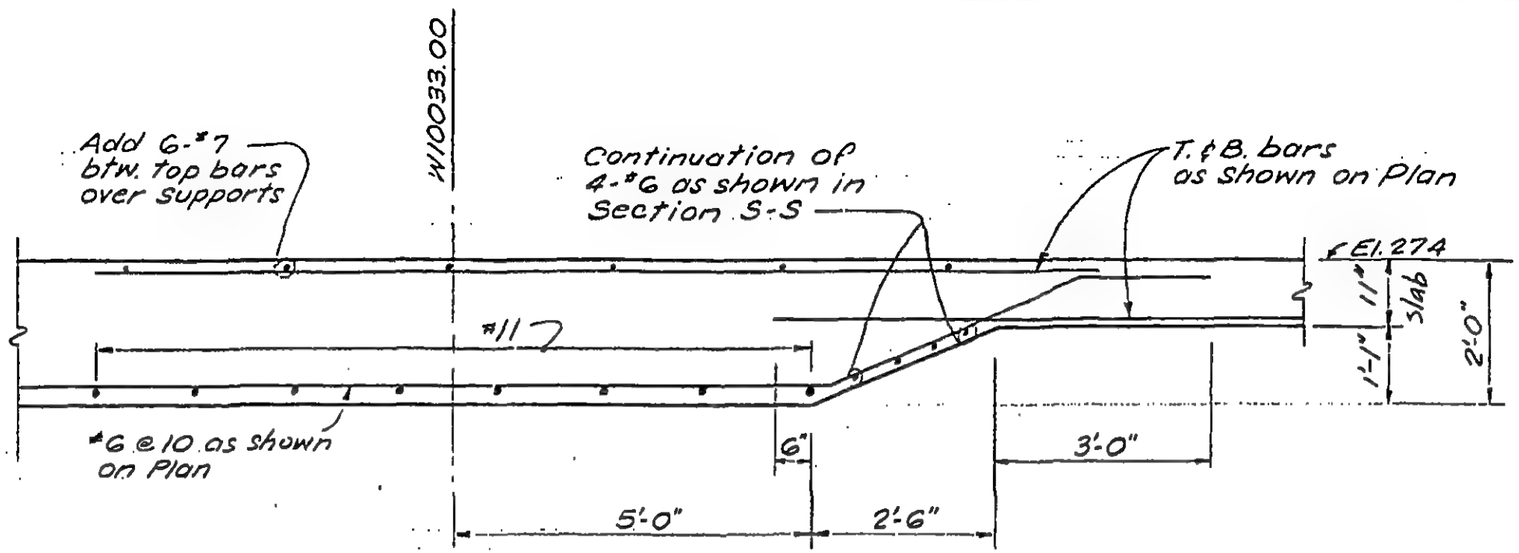

Section T-T
(½" = 1'-0")

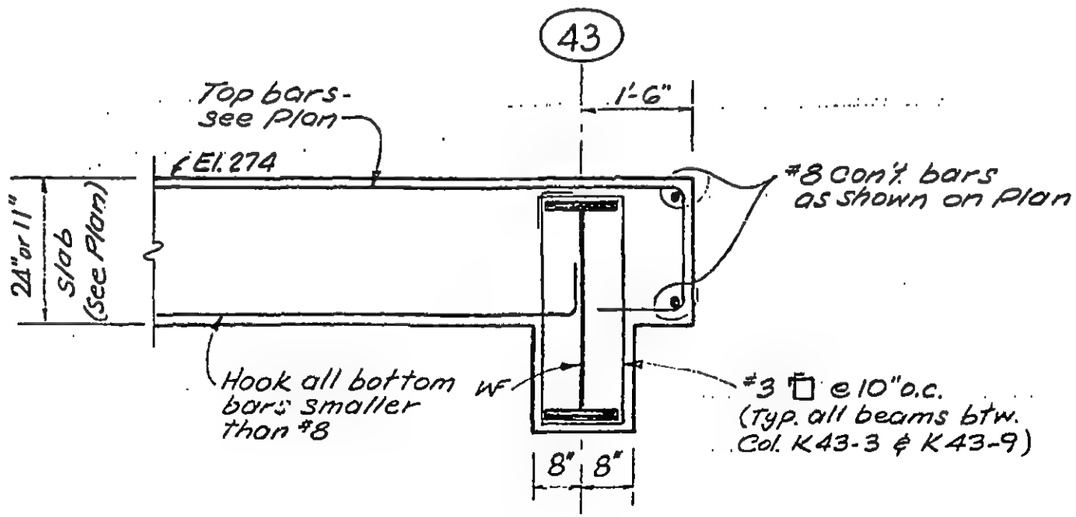

Section U-U
(½" = 1'-0")

LICENSED PROFESSIONAL ENGINEER — LESLIE E. ROBERTSON — No. 34360 — UNIVERSITY OF THE STATE OF NEW YORK

DESIGNED

DRAWN S.C.

REVIEWED E.L.

8-JK8-51.11

SKILLING, HELLE, CHRISTIANSEN, ROBERTSON — Structural & Civil Engineers

PROJECT THE WORLD TRADE CENTER | TITLE SECTIONS AT EL. 274'-0" | DATE 9-12-69

REVISIONS

9-18-72

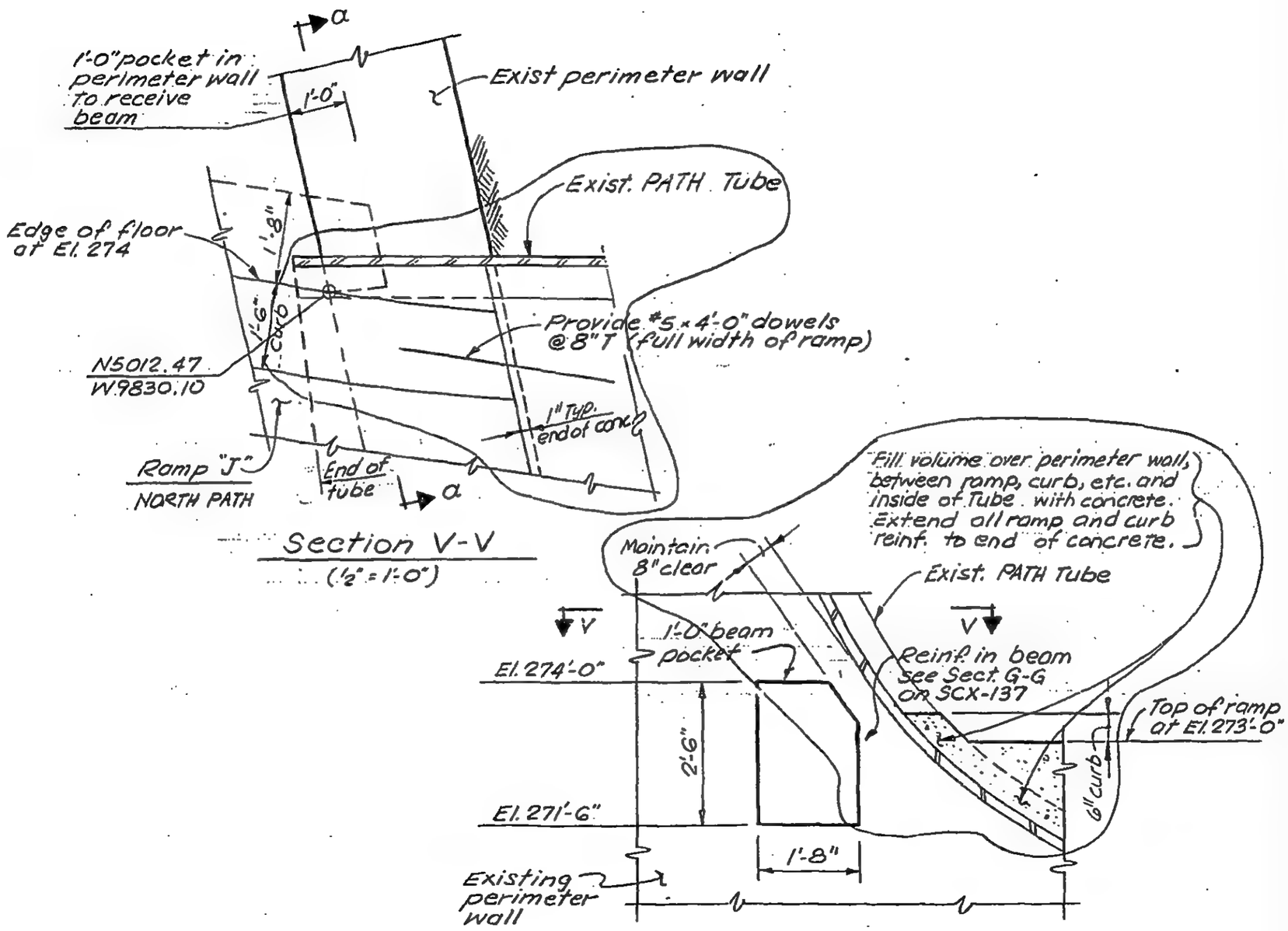

LICENSED PROFESSIONAL ENGINEER
LESLIE E. ROBERTSON
No. 34360
UNIVERSITY OF THE STATE OF NEW YORK

DESIGNED

DRAWN S.C.

REVIEWED E.L.

8-JK8-51.12

SKILLING, HELLE, CHRISTIANSEN, ROBERTSON — Structural & Civil Engineers

PROJECT THE WORLD TRADE CENTER | TITLE SECTIONS AT EL. 274'-0" | DATE 9-12-69

REVISIONS

9-18-72

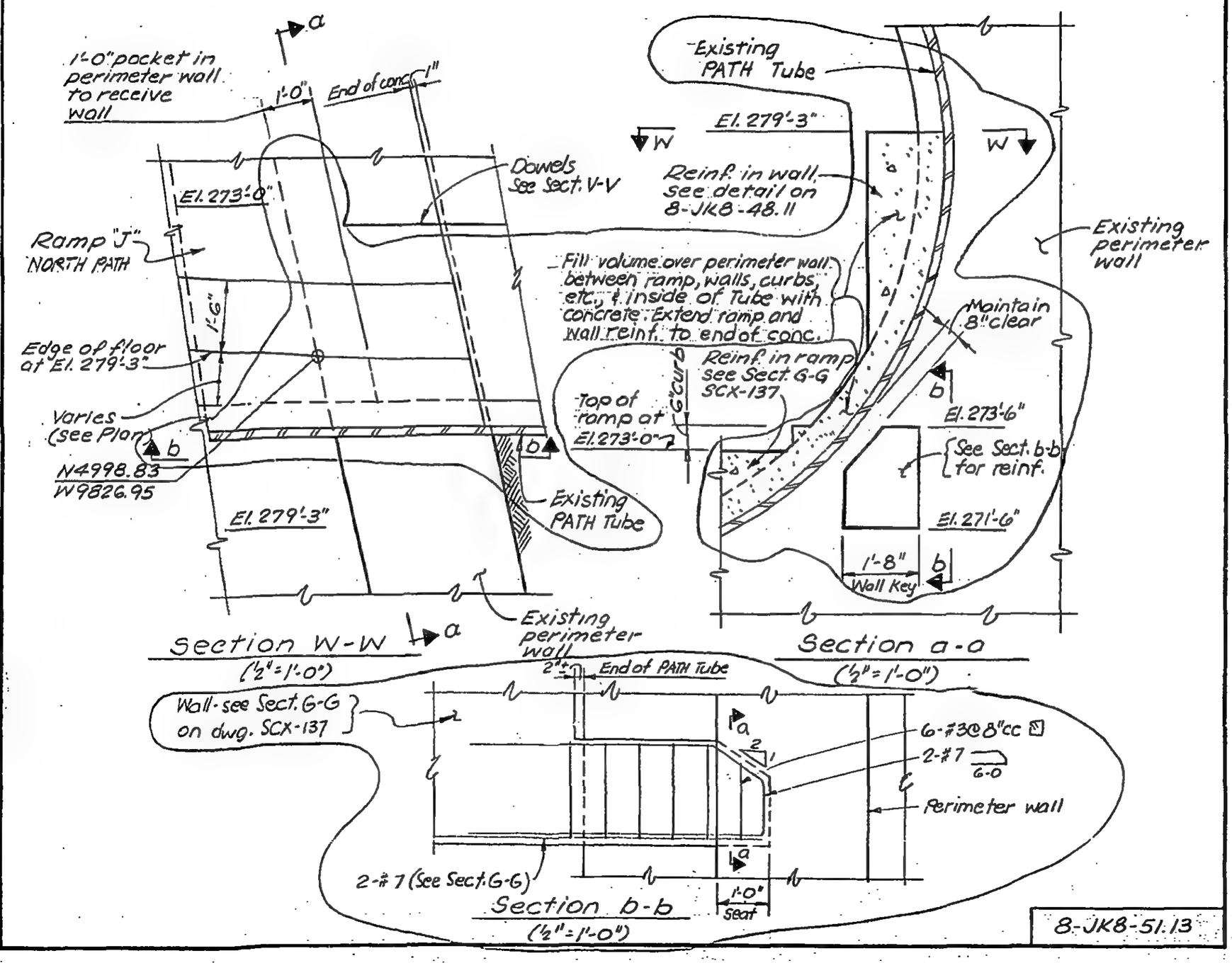

8-JK8-51.13

LICENSED PROFESSIONAL ENGINEER — LESLIE E. ROBERTSON — No. 34360 — UNIVERSITY OF THE STATE OF NEW YORK

DESIGNED

DRAWN S.C.

REVIEWED E.L.

SKILLING, HELLE, CHRISTIANSEN, ROBERTSON — Structural & Civil Engineers

PROJECT THE WORLD TRADE CENTER | TITLE PUMP PLATFORM ANCHOR BOLT DETAILS | DATE 4-29-69

REVISIONS

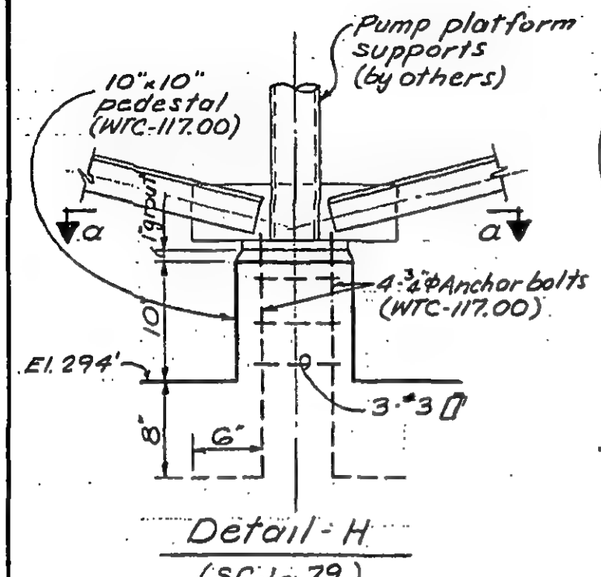

Detail - H
(SCJ-79)

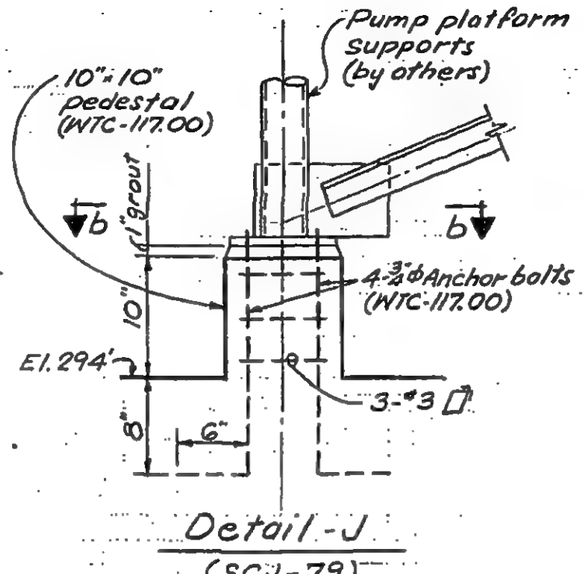

Detail - J
(SCJ-79)

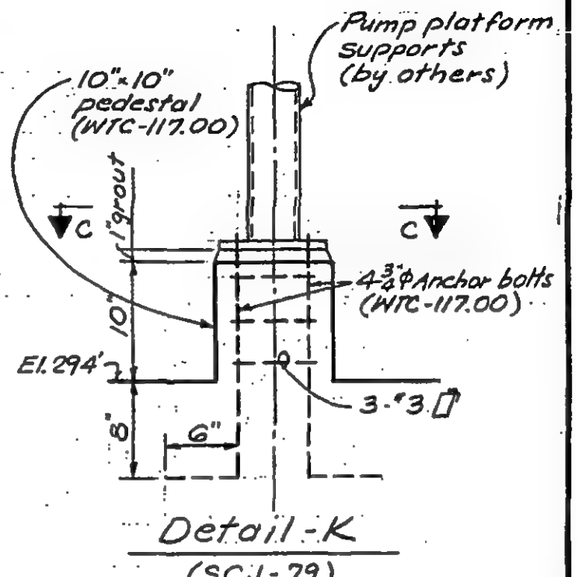

Detail - K
(SCJ-79)

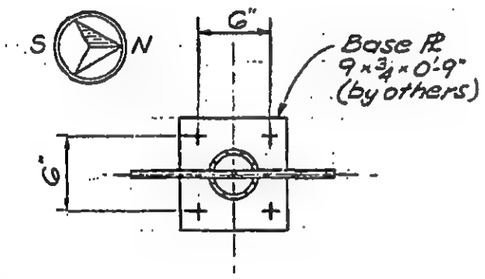

Section a-a

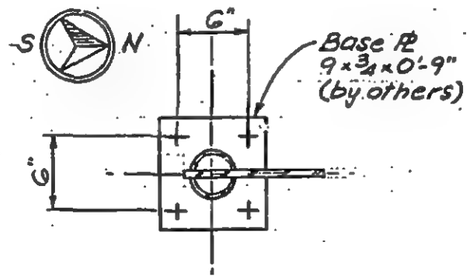

Section b-b

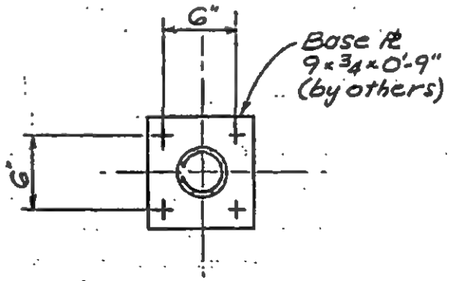

Section c-c

Notes:
1. Contractor to provide and install all 3/4"Φ A. bolts with proper nuts & spring washers at top.
2. Contractor to coordinate with Arch't. dwgs & Platform shop dwgs for exact locations of A. bolts.

LICENSED PROFESSIONAL ENGINEER
LESLIE E. ROBERTSON
No. 34980
UNIVERSITY OF THE STATE OF NEW YORK

DESIGNED

DRAWN S.C.

REVIEWED E.L.

8-JK8-52.1

SKILLING, HELLE, CHRISTIANSEN, ROBERTSON — Structural & Civil Engineers

PROJECT THE WORLD TRADE CENTER | TITLE SECTIONS AT EL. 310'-0" | DATE 5-5-69

REVISIONS

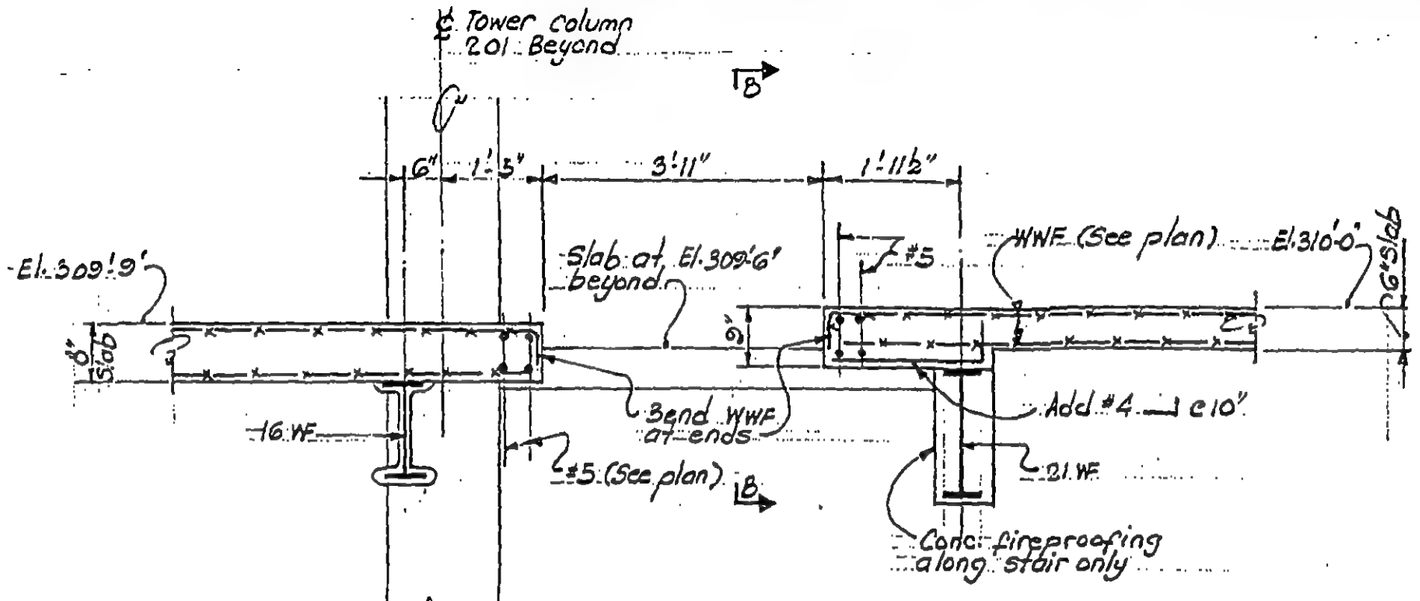

Section A-A
(½" = 1'-0")

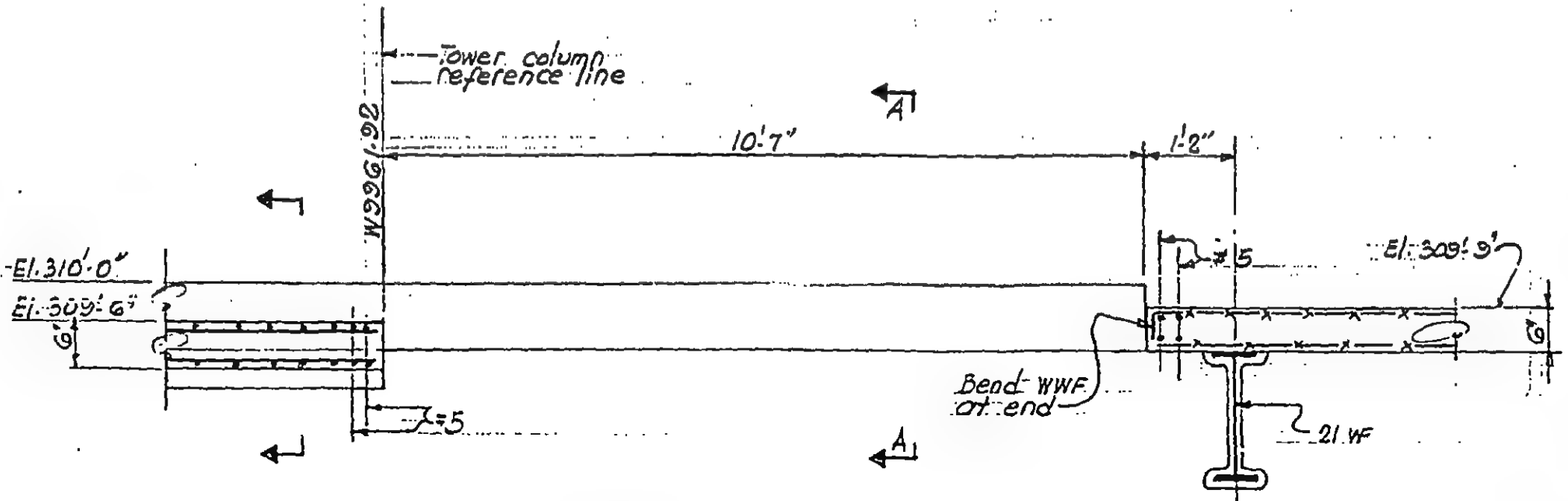

Section B-B

LICENSED PROFESSIONAL ENGINEER
LESLIE E. ROBERTSON
No. 34360
UNIVERSITY OF THE STATE OF NEW YORK

DESIGNED

DRAWN
S.T.M.

REVIEWED
E.L.

SKILLING, HELLE, CHRISTIANSEN, ROBERTSON — Structural & Civil Engineers

PROJECT THE WORLD TRADE CENTER | TITLE SECTIONS AT EL. 310'0" | DATE 5-5-69

REVISIONS

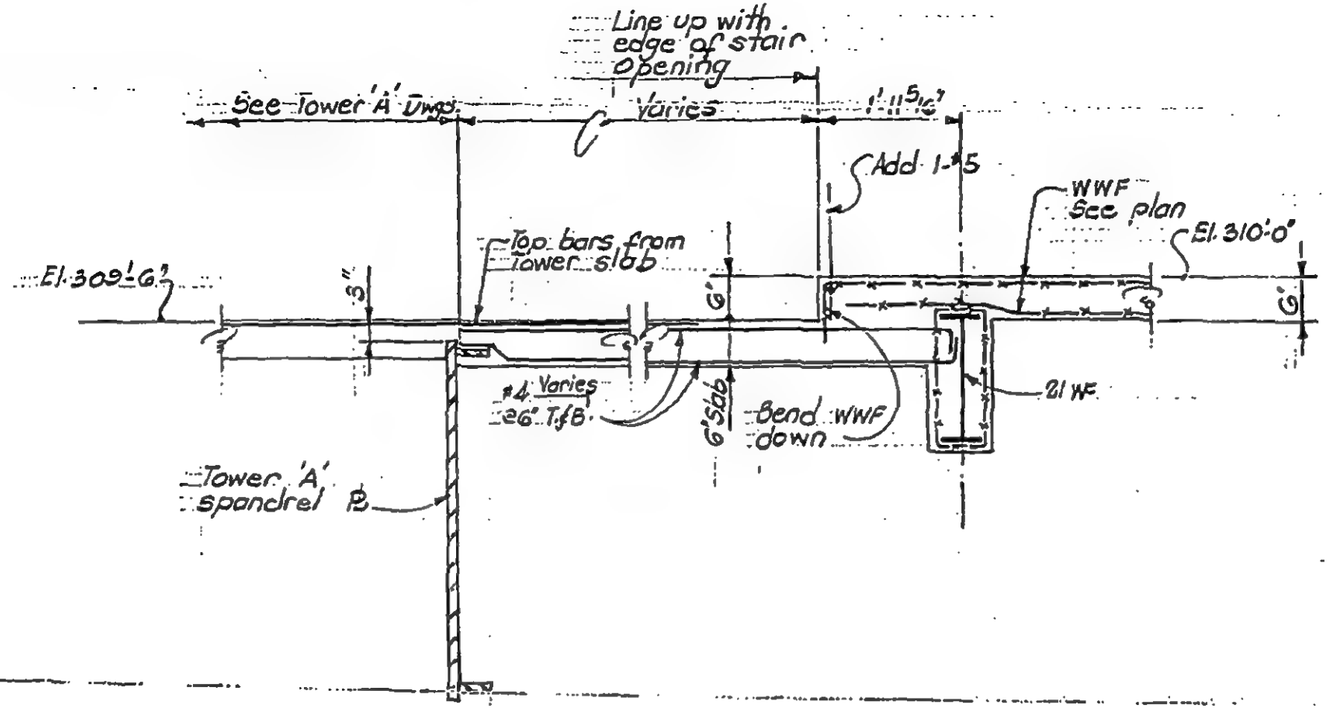

Section C-C
(½" = 1'-0")

LICENSED PROFESSIONAL ENGINEER
LESLIE E. ROBERTSON
No. 34360
UNIVERSITY OF THE STATE OF NEW YORK

DESIGNED

DRAWN S.T.M.

REVIEWED

8-JK8-54.2

SKILLING, HELLE, CHRISTIANSEN, ROBERTSON — Structural & Civil Engineers

PROJECT: THE WORLD TRADE CENTER | TITLE: SECTIONS AT EL. 310'-0" | DATE: 5-5-69

REVISIONS

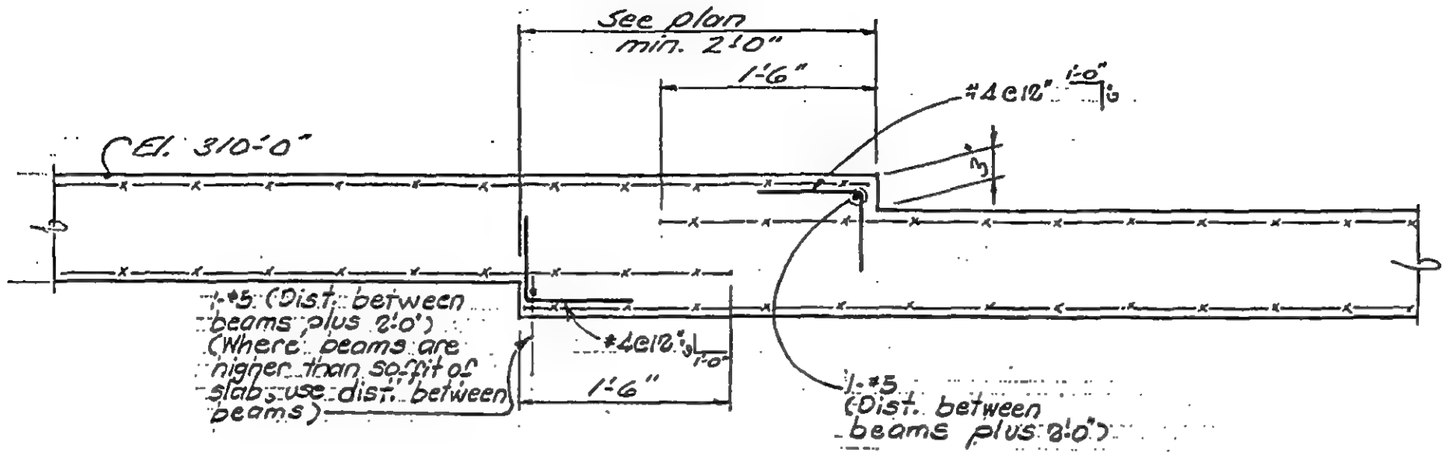

Section D-D

LICENSED PROFESSIONAL ENGINEER — LESLIE E. ROBERTSON — No. 34360 — UNIVERSITY OF THE STATE OF NEW YORK

DESIGNED

DRAWN: SC

REVIEWED: E.L.

8-JK8-54.3

SKILLING, HELLE, CHRISTIANSEN, ROBERTSON — Structural & Civil Engineers

PROJECT THE WORLD TRADE CENTER | TITLE SECTIONS AT El. 310'-0" | DATE 5-5-69

REVISIONS

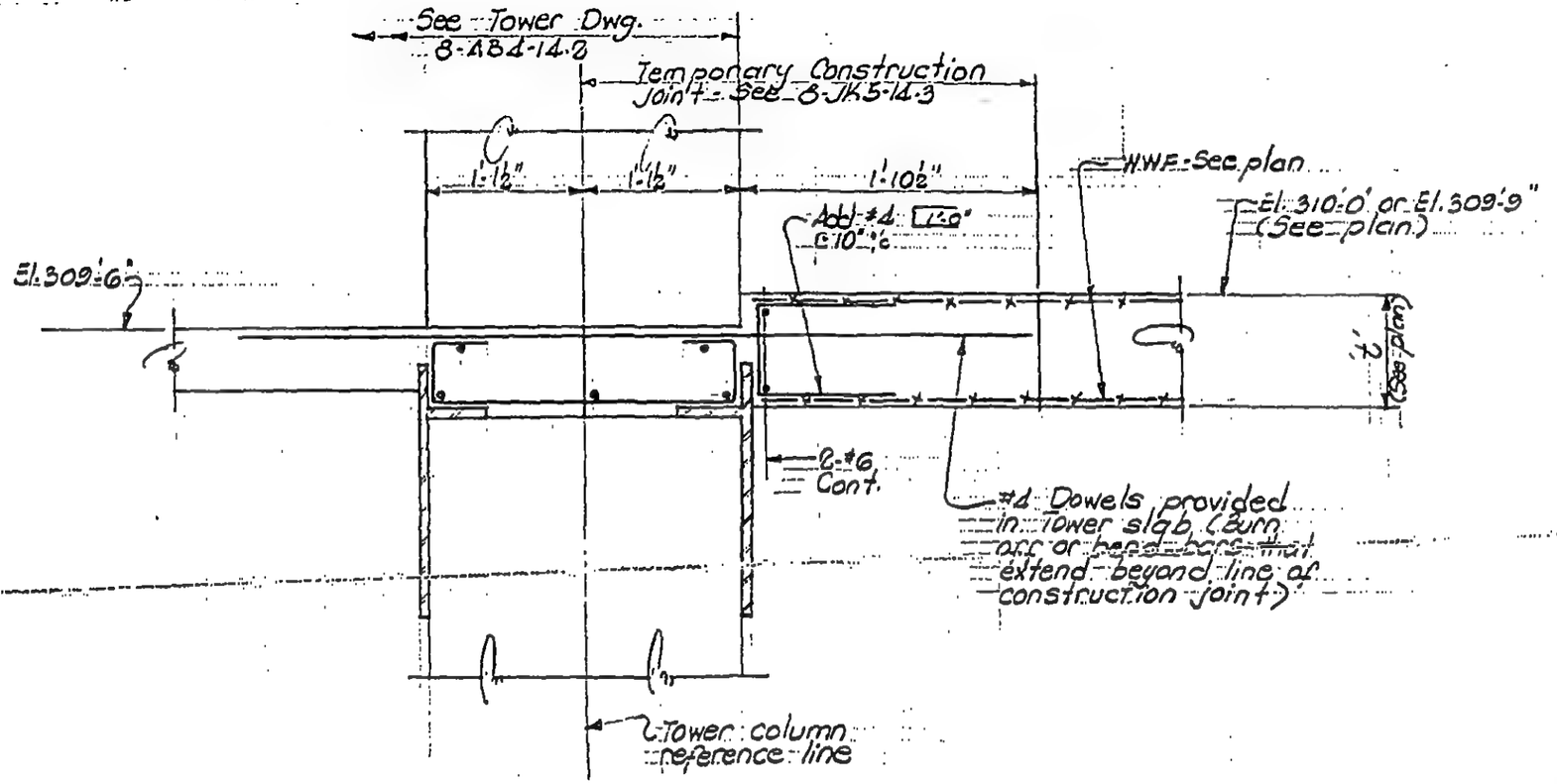

Section E-E

LICENSED PROFESSIONAL ENGINEER — LESLIE E. ROBERTSON — No. 34360 — UNIVERSITY OF THE STATE OF NEW YORK

DESIGNED

DRAWN S.T.M.

REVIEWED E.L.

8-JK8-54.4

SKILLING, HELLE, CHRISTIANSEN, ROBERTSON — Structural & Civil Engineers

PROJECT: THE WORLD TRADE CENTER | TITLE: SECTIONS AT EL 310'-0" | DATE: 6-11-69

REVISIONS

7-16-69

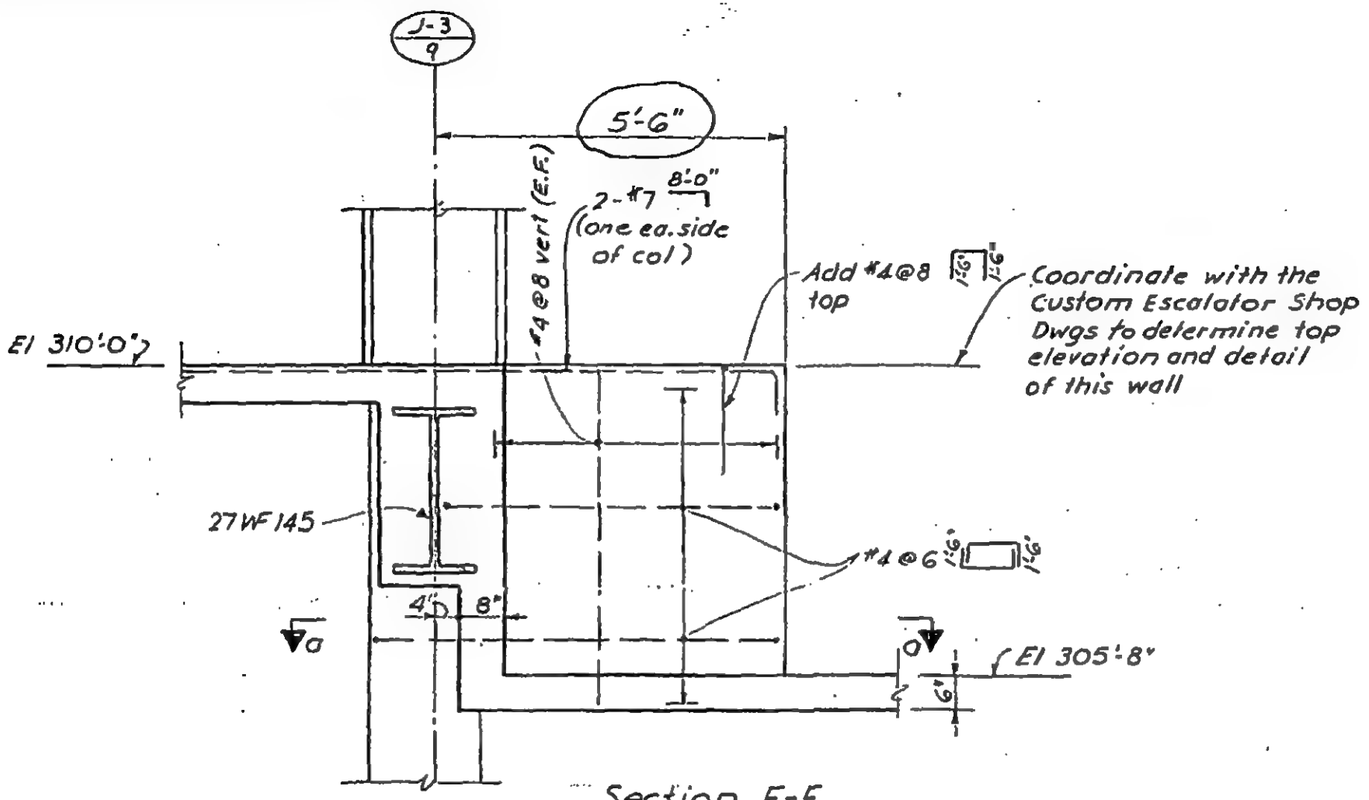

Section F-F
(2"-1'-0")

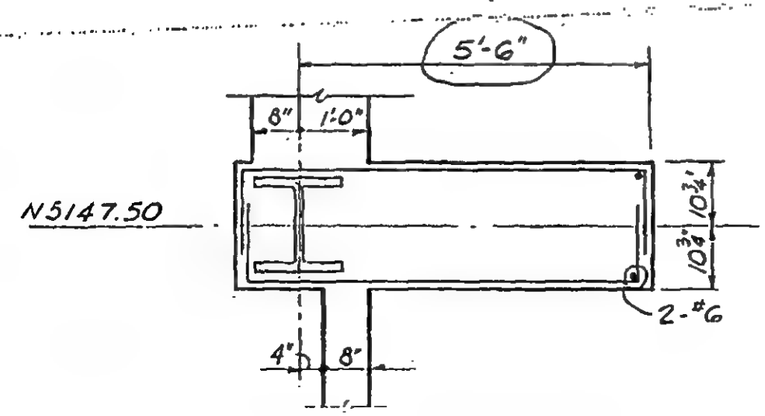

Section a-a

LICENSED PROFESSIONAL ENGINEER — LESLIE E. ROBERTSON — No. 34360 — UNIVERSITY OF THE STATE OF NEW YORK

DESIGNED

DRAWN: F. Smith

REVIEWED: F.L.

8-JK8-54.5

SKILLING, HELLE, CHRISTIANSEN, ROBERTSON — Structural & Civil Engineers

PROJECT THE WORLD TRADE CENTER | TITLE SECTIONS AT EL 310'-0" | DATE 6-11-69

REVISIONS

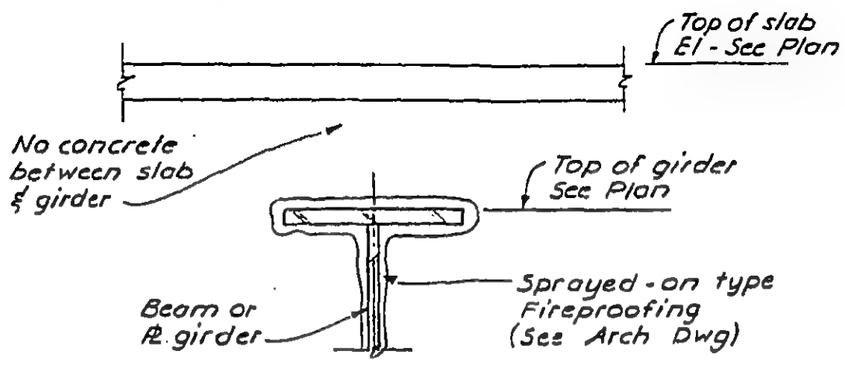

Section 6-6

(No scale)

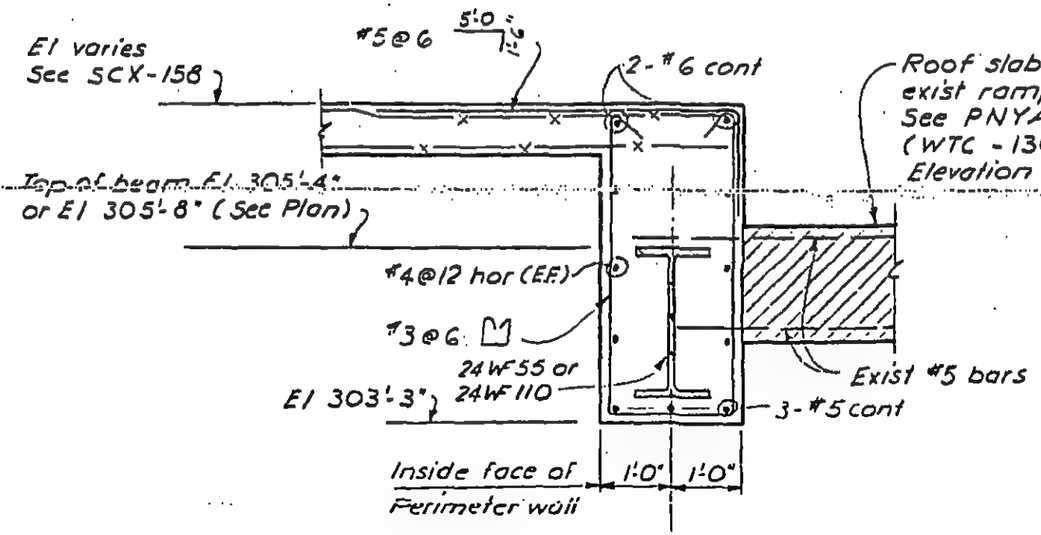

Section H-H

(½" = 1'-0")

LICENSED PROFESSIONAL ENGINEER
LESLIE E. ROBERTSON
No. 34360
UNIVERSITY OF THE STATE OF NEW YORK

DESIGNED

DRAWN F. Smith

REVIEWED E.L.

8-JK8-54.6

SKILLING, HELLE, CHRISTIANSEN, ROBERTSON — Structural & Civil Engineers

PROJECT THE WORLD TRADE CENTER | TITLE SECTIONS AT EL. 310'-0" | DATE 10-1-69

REVISIONS

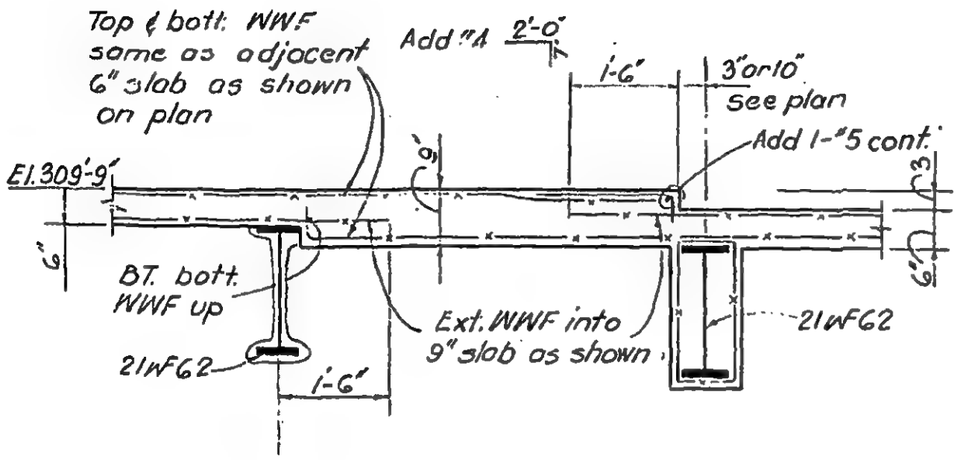

SECTION J-J
(½"=1'-0")

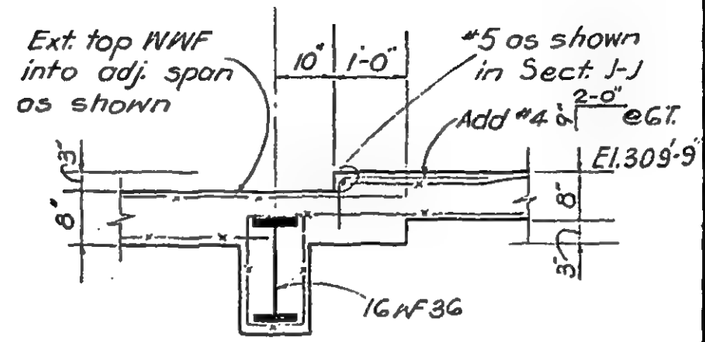

SECTION K-K
(½"=1'-0")

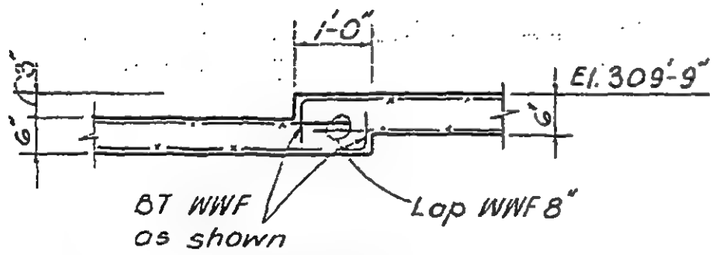

SECTION L-L
(½"=1'-0")

LICENSED PROFESSIONAL ENGINEER — LESLIE E. ROBERTSON — No. 34960 — OF THE STATE OF NEW YORK

DESIGNED

DRAWN D.U.

REVIEWED E.L.

8-JK8-54.7

SKILLING, HELLE, CHRISTIANSEN, ROBERTSON — Structural & Civil Engineers

PROJECT THE WORLD TRADE CENTER | TITLE SECTION AT EL. 310'-0" | DATE 11-5-69

REVISIONS

11-25-69

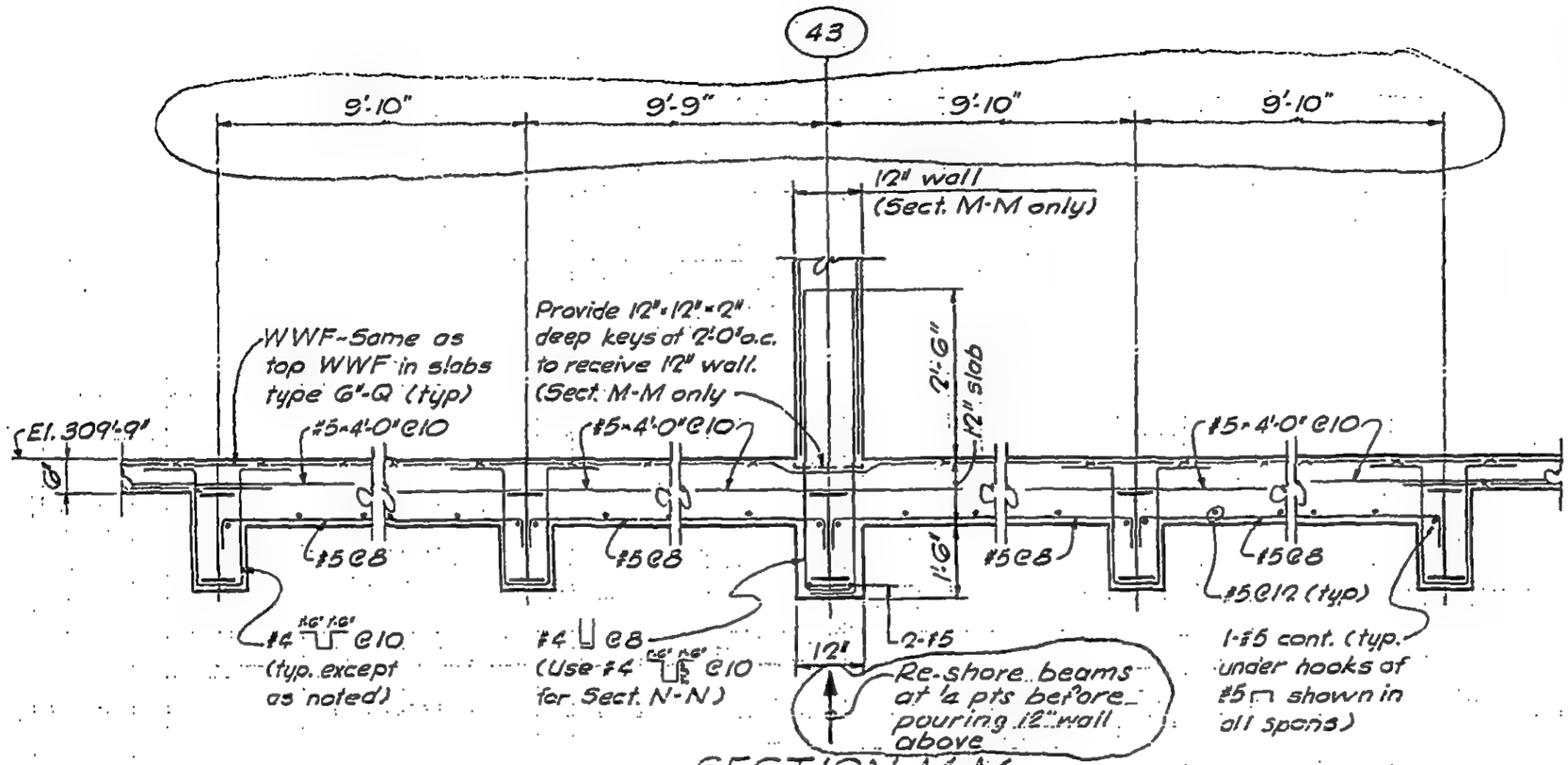

SECTION M-M

SECTION N-N

(1/2"-1'-0")

LICENSED PROFESSIONAL ENGINEER
LESLIE E. ROBERTSON
No 34360
UNIVERSITY OF THE STATE OF NEW YORK

DESIGNED E.L.

DRAWN G.K.

REVIEWED

8-JK8-54.8

SKILLING, HELLE, CHRISTIANSEN, ROBERTSON — Structural & Civil Engineers

PROJECT THE WORLD TRADE CENTER | TITLE SECTION AT EL. 310'-0" | DATE 2-9-70

REVISIONS

6-12-72

6-22-72

6-15-73

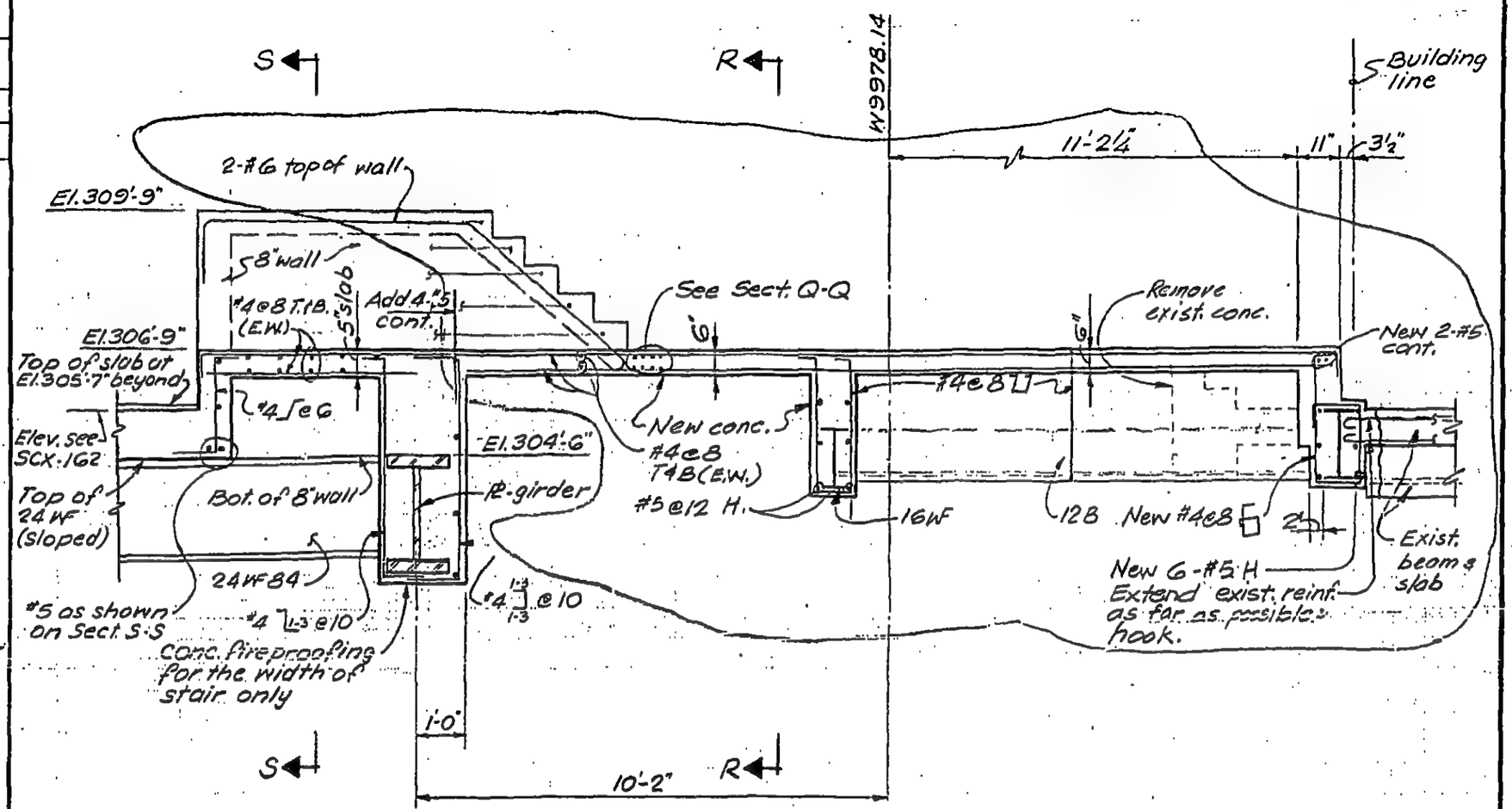

SECTION P-P

(3/8" = 1'-0")

LICENSED PROFESSIONAL ENGINEER — LESLIE E. ROBERTSON — No 34360 — UNIVERSITY OF THE STATE OF NEW YORK

DESIGNED

DRAWN S.C.

REVIEWED E.L.

8-JK8-54.9

SKILLING, HELLE, CHRISTIANSEN, ROBERTSON — Structural & Civil Engineers

PROJECT THE WORLD TRADE CENTER | TITLE SECTION AT EL. 310'-0" | DATE 2-9-70

REVISIONS
4-3-70.
6-12-72
6-22-72
6-15-73

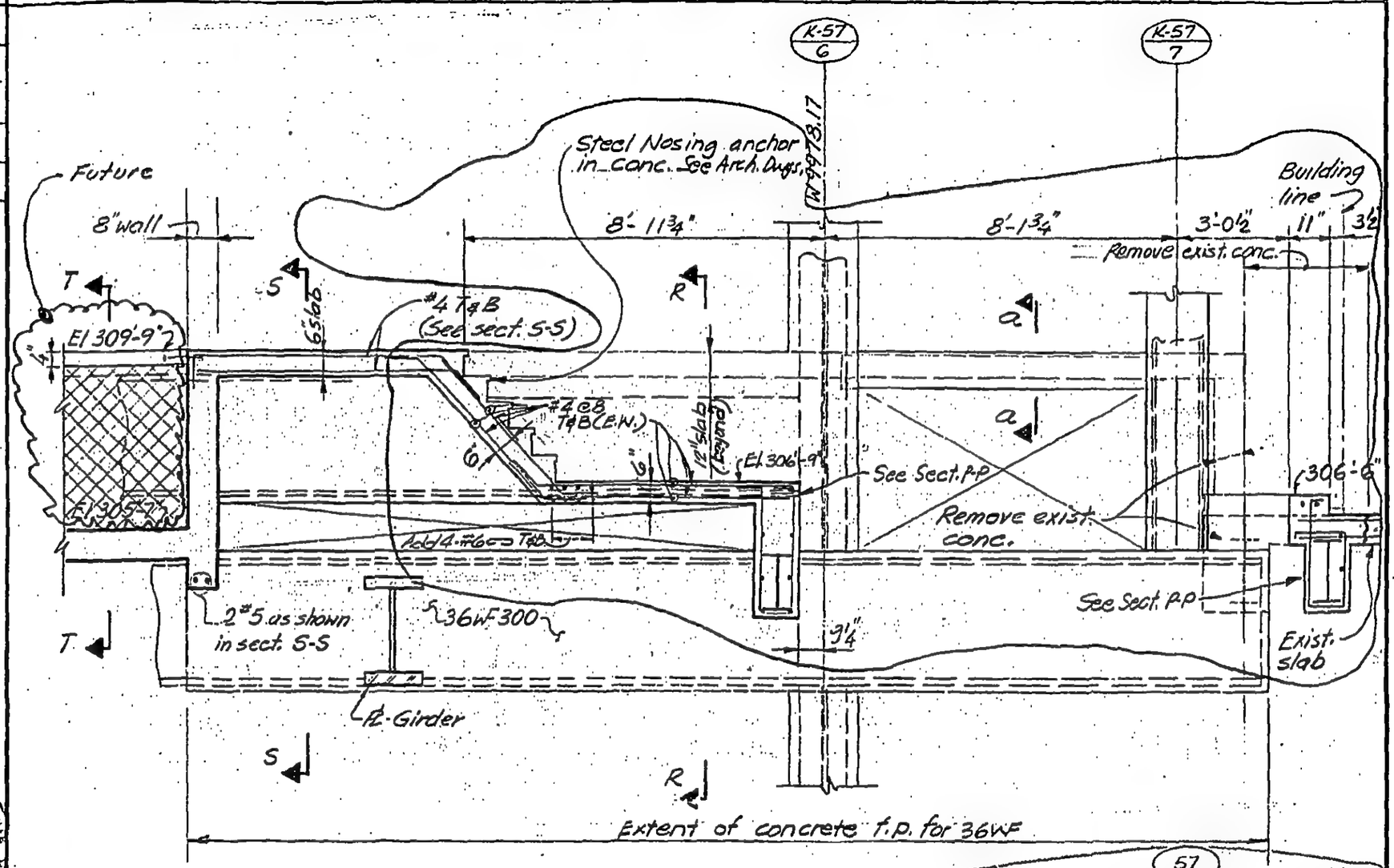

SECTION Q-Q
(⅜"=1'-0")

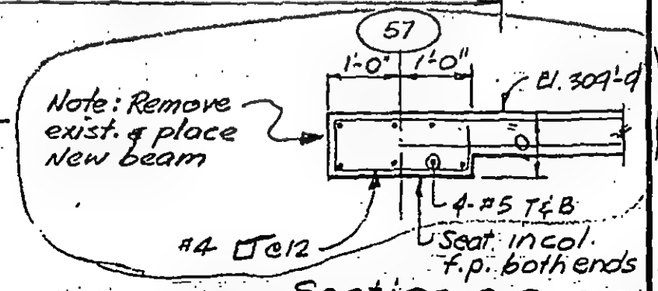

Section a-a
(½"=1'0")

8-JK8-54.10

LICENSED PROFESSIONAL ENGINEER
LESLIE E. ROBERTSON
No. 34360
UNIVERSITY OF THE STATE OF NEW YORK

DESIGNED
DRAWN J. Gricius
REVIEWED E.L.

SKILLING, HELLE, CHRISTIANSEN, ROBERTSON — Structural & Civil Engineers

PROJECT: THE WORLD TRADE CENTER | TITLE: SECTIONS AT STAIR K-6A, EL 310 | DATE: 2-9-70

REVISIONS

6-12-72

6-22-72

6-15-73

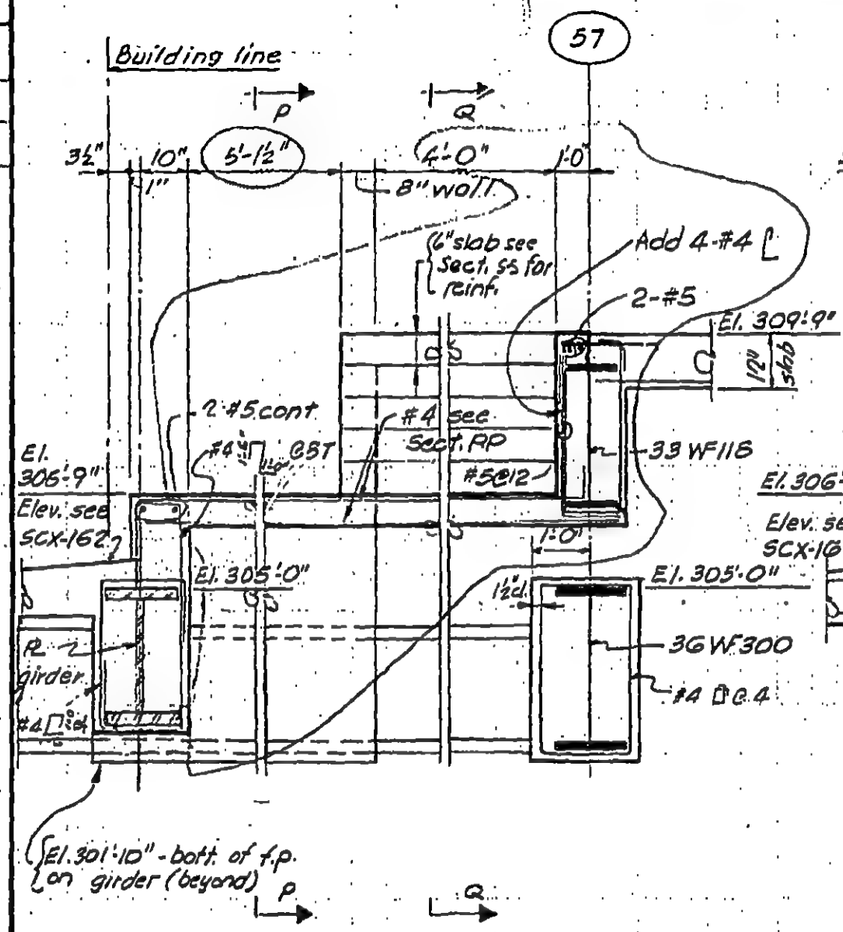

SECTION R-R

(3/8" = 1'-0")

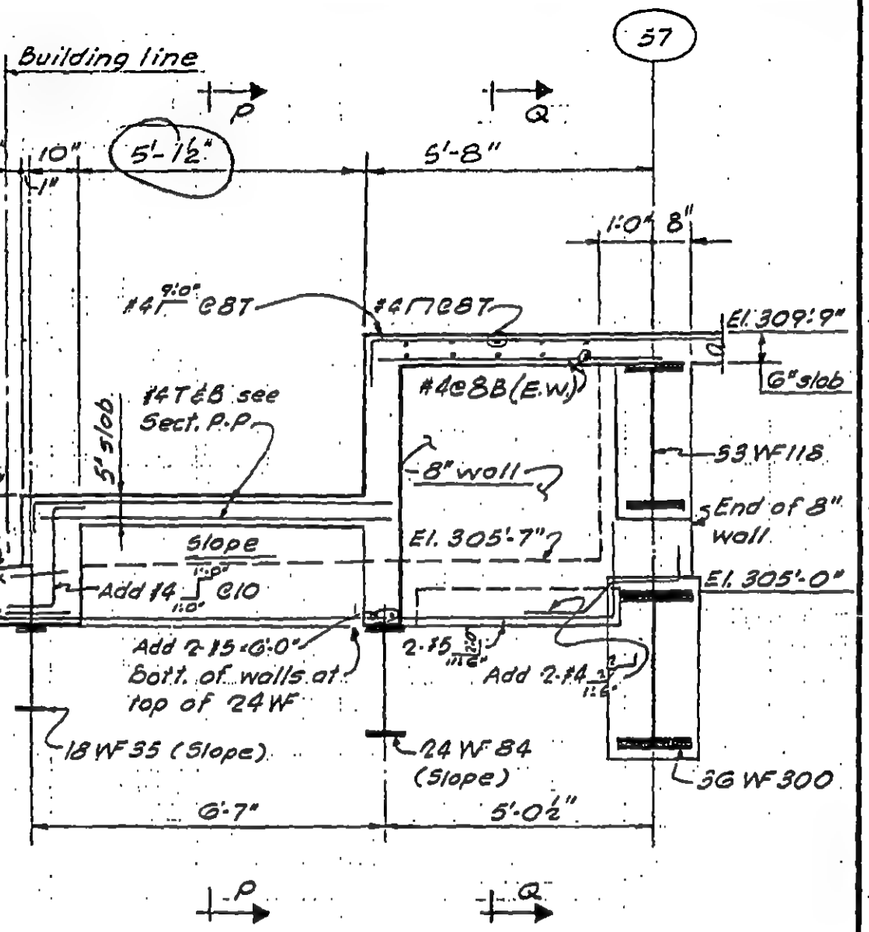

SECTION S-S

(3/8" = 1'-0")

LICENSED PROFESSIONAL ENGINEER — LESLIE E. ROBERTSON — No. 34360 — UNIVERSITY OF THE STATE OF NEW YORK

DESIGNED

DRAWN: GK

REVIEWED: EL

8-JK8-54.11

SKILLING, HELLE, CHRISTIANSEN, ROBERTSON — Structural & Civil Engineers

PROJECT THE WORLD TRADE CENTER | TITLE SECTIONS AT EL. 310'-0" | DATE 2-9-70

REVISIONS

6-15-73

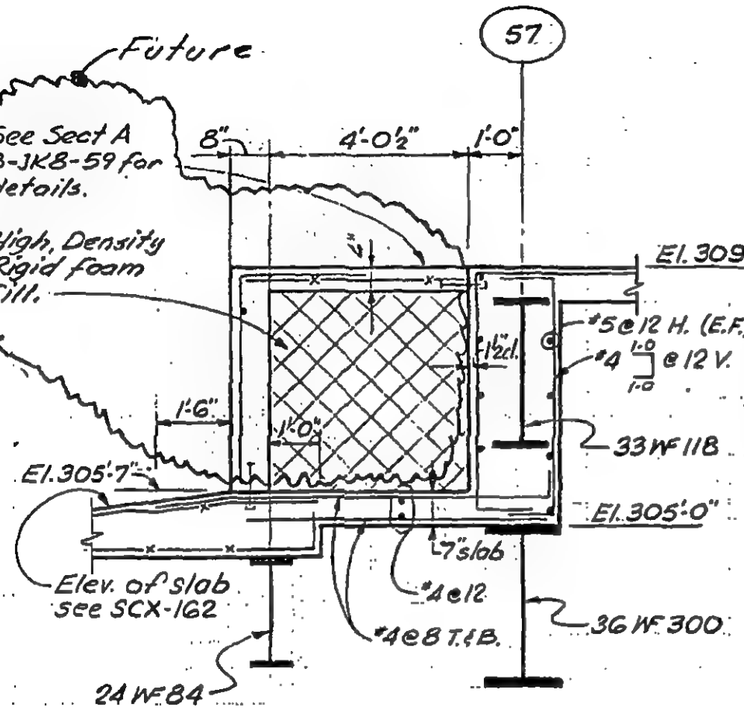

Section T-T

(⅜" = 1'-0")

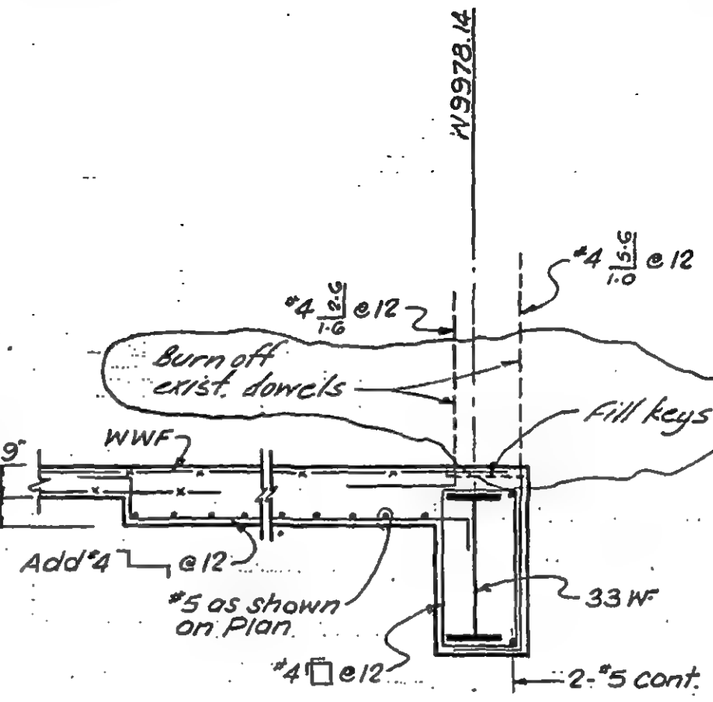

Section U-U

(⅜" = 1'-0")

LICENSED PROFESSIONAL ENGINEER — LESLIE E. ROBERTSON — No. 34360 — UNIVERSITY OF THE STATE OF NEW YORK

DESIGNED

DRAWN S.C.

REVIEWED E.L.

8-JK8-54.12

SKILLING, HELLE, CHRISTIANSEN, ROBERTSON — Structural & Civil Engineers

PROJECT: THE WORLD TRADE CENTER | TITLE: SECTIONS AT EL. 310'-0" | DATE: 2-9-70

REVISIONS

6-15-73

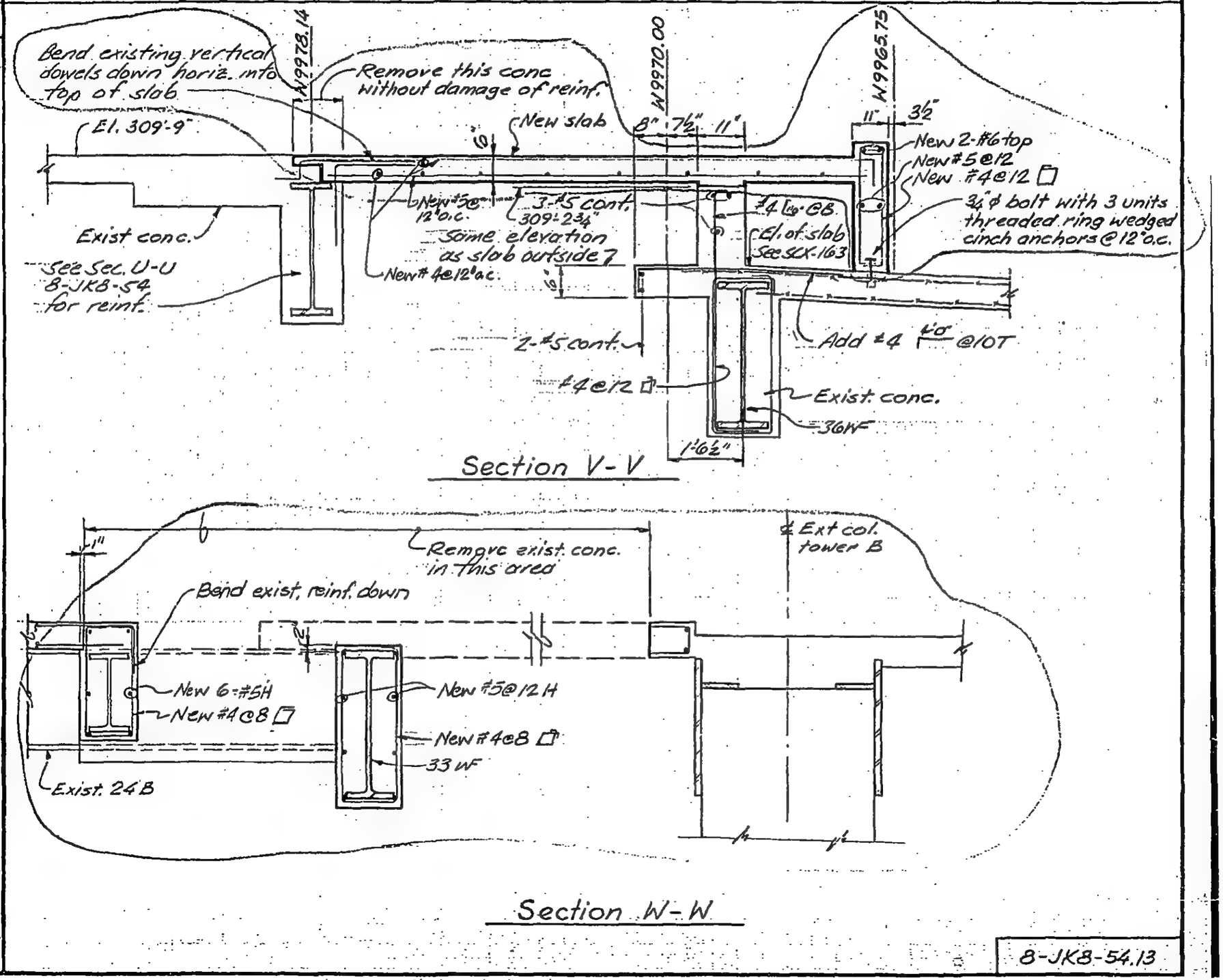

Section V-V

Section W-W

LICENSED PROFESSIONAL ENGINEER — LESLIE E. ROBERTSON — No. 34360 — UNIVERSITY OF THE STATE OF NEW YORK

DESIGNED: P.Y.

DRAWN: J. Gricius

REVIEWED: WAD

8-JKB-54.13

SKILLING, HELLE, CHRISTIANSEN, ROBERTSON — Structural & Civil Engineers

PROJECT THE WORLD TRADE CENTER | TITLE SECTIONS AT El. 310 | DATE 2-9-70

REVISIONS

6-15-73

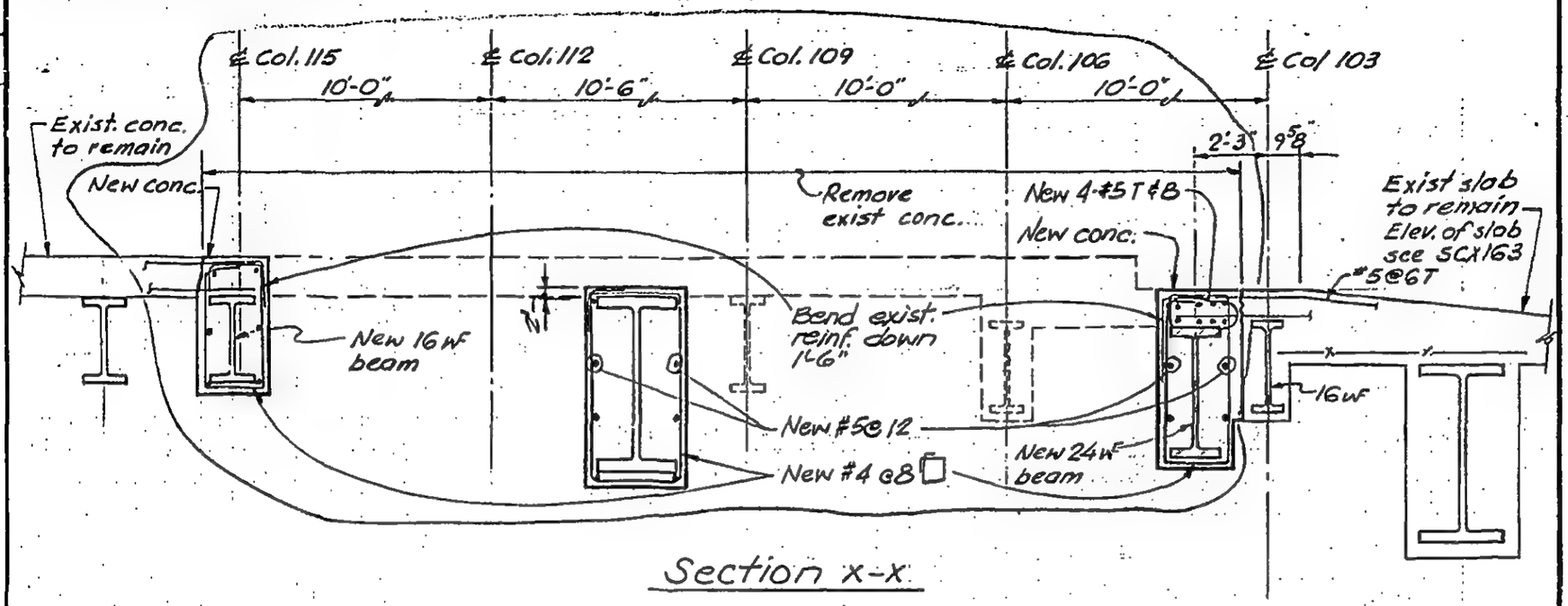

Section X-X

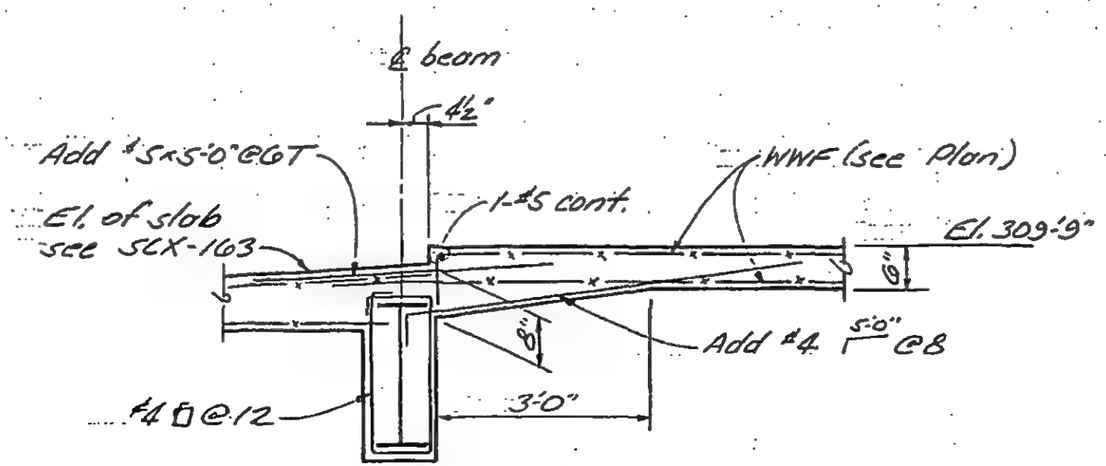

Section Y-Y
(½"=1'-0")

LICENSED PROFESSIONAL ENGINEER — LESLIE E. ROBERTSON — No. 34360 — UNIVERSITY OF THE STATE OF NEW YORK

DESIGNED

DRAWN J. Gricius

REVIEWED WAB

8-JK8-54.14

SKILLING, HELLE, CHRISTIANSEN, ROBERTSON — Structural & Civil Engineers

PROJECT THE WORLD TRADE CENTER | TITLE SECTIONS AT EL. 279'-3" | DATE 7-18-69

REVISIONS

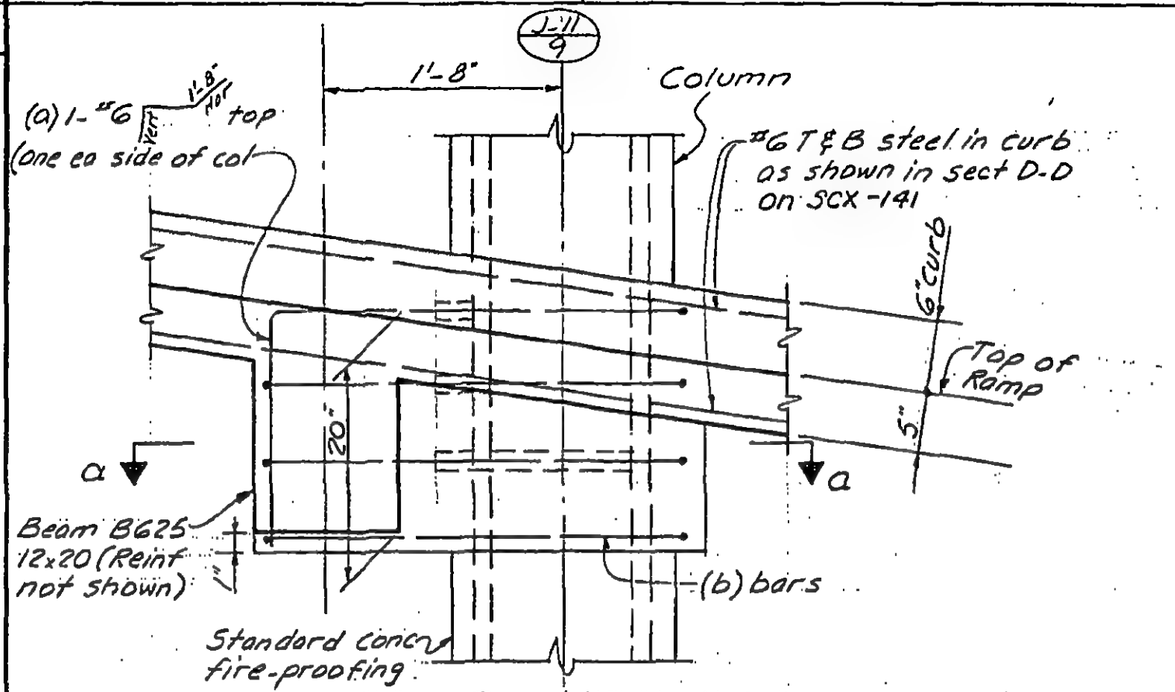

Section A-A
(1"=1'-0")

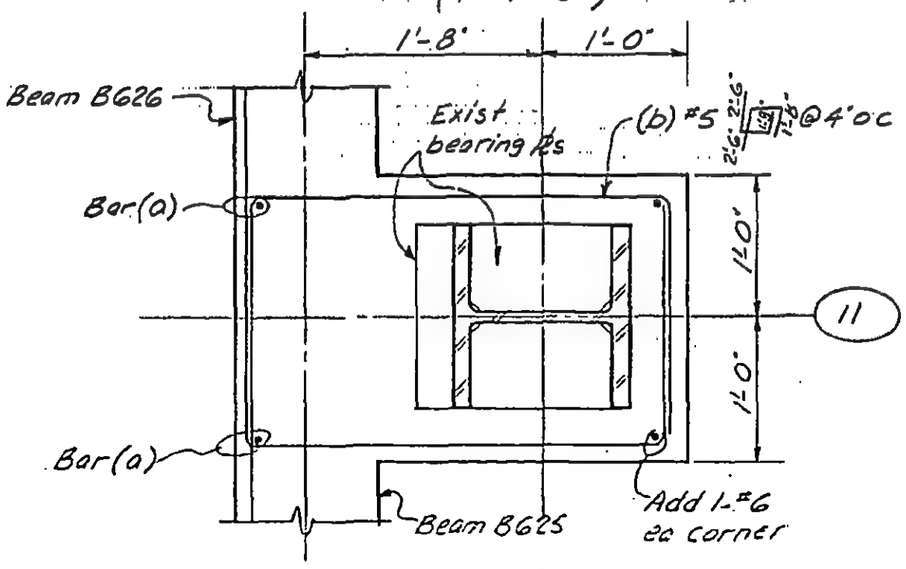

Section a-a
(1"=1'-0")

LICENSED PROFESSIONAL ENGINEER — LESLIE E. ROBERTSON — No. 34260 — UNIVERSITY OF THE STATE OF NEW YORK

DESIGNED

DRAWN A.L. FRANQUI

REVIEWED E.L.

8-JK8-56.1

SKILLING, HELLE, CHRISTIANSEN, ROBERTSON — Structural & Civil Engineers

PROJECT: THE WORLD TRADE CENTER | TITLE: SECTION AT EL. 279'-3" | DATE: 7-18-69

REVISIONS

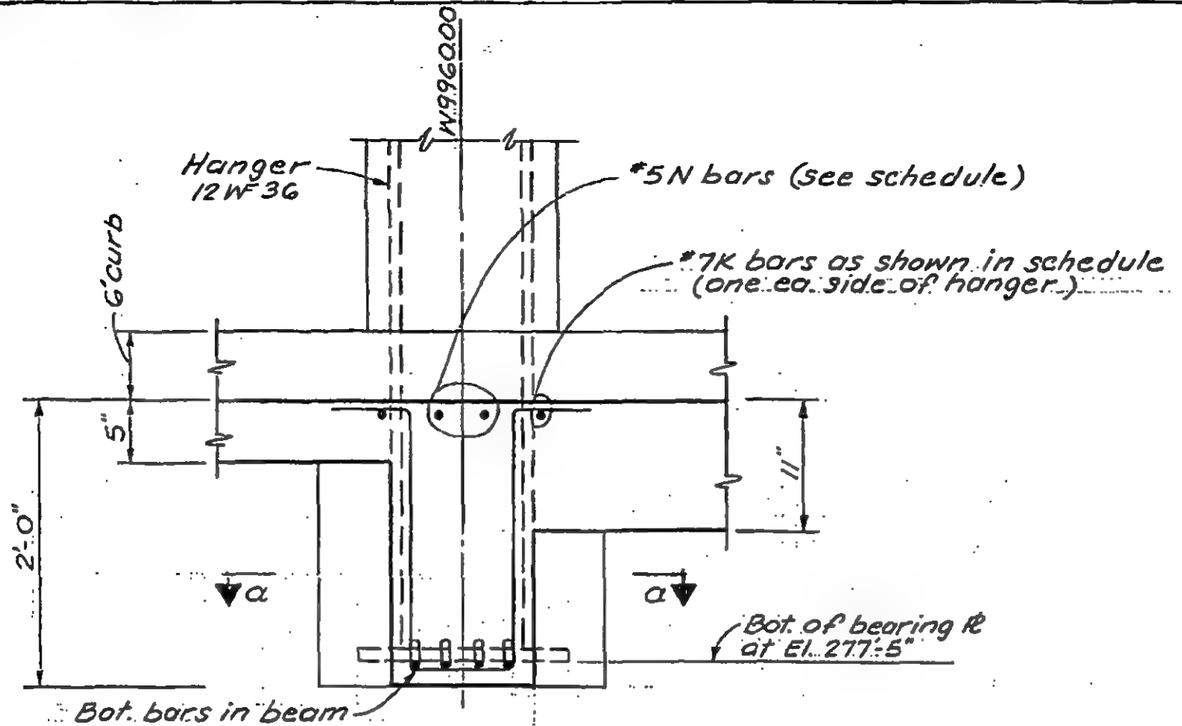

Section B-B
(1" = 1'-0")

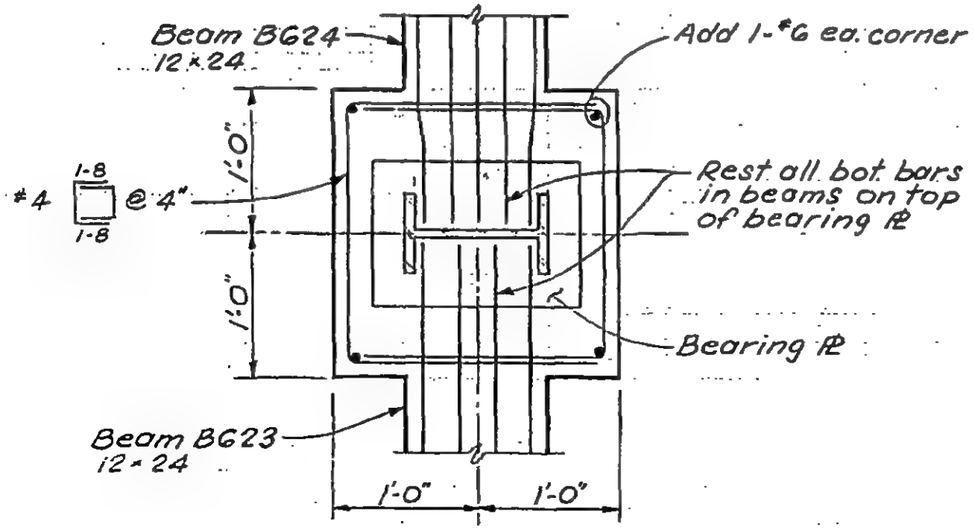

Section a-a
(1" = 1'-0")

LICENSED PROFESSIONAL ENGINEER
LESLIE E. ROBERTSON
No. 34360
UNIVERSITY OF THE STATE OF NEW YORK

DESIGNED

DRAWN
S.C.

REVIEWED
E.L.

B-JK.8-56.2

SKILLING - HELLE - CHRISTIANSEN - ROBERTSON Structural & Civil Engineers

PROJECT WORLD TRADE CENTER | TITLE SECTIONS AT EL. 279'-3" | DATE 7-18-68

REVISIONS
12-30-69
3-6-70

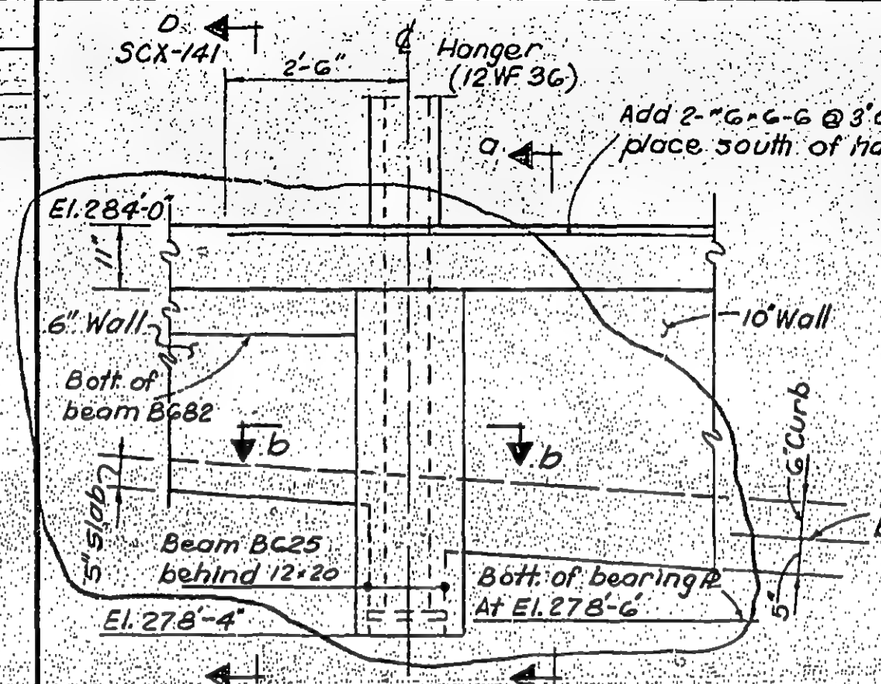

Section C-C
(½" = 1'-0")

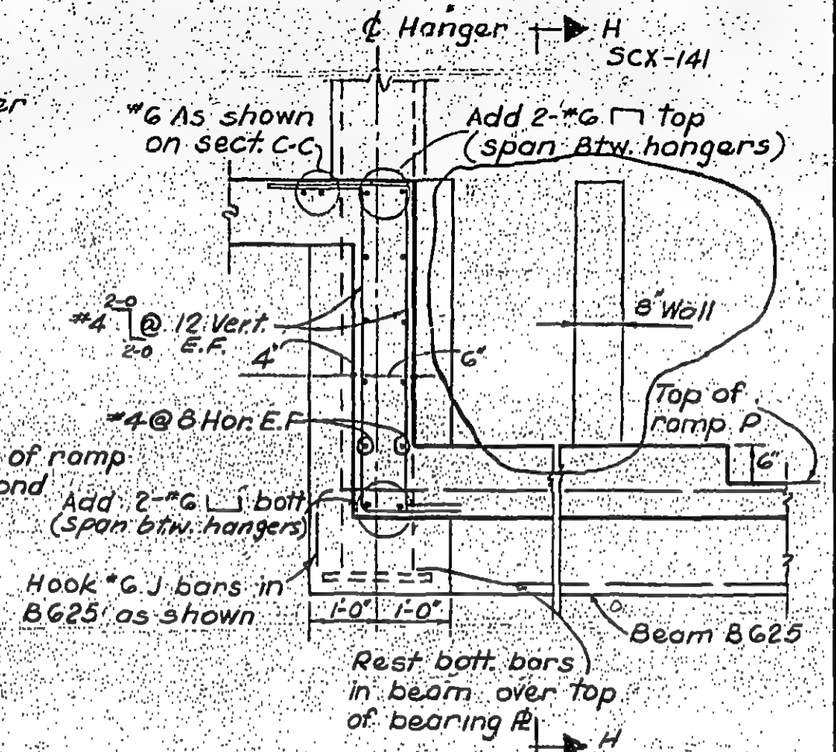

Section a-a
(½" = 1'-0")

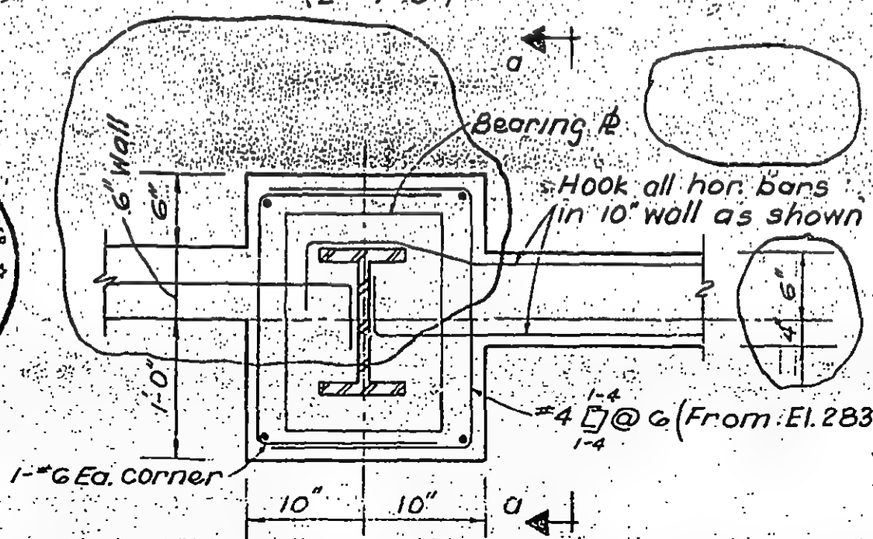

Section b-b
(1" = 1'-0")

LICENSED PROFESSIONAL ENGINEER
LESLIE E. ROBERTSON
No. 34360
UNIVERSITY OF THE STATE OF NEW YORK

DRAWN D.U.
REVIEWED E.L.

8-JK8-56.3

SKILLING, HELLE, CHRISTIANSEN, ROBERTSON — Structural & Civil Engineers

PROJECT THE WORLD TRADE CENTER | TITLE SECTIONS AT EL. 279'-3" | DATE 7-18-69.

REVISIONS

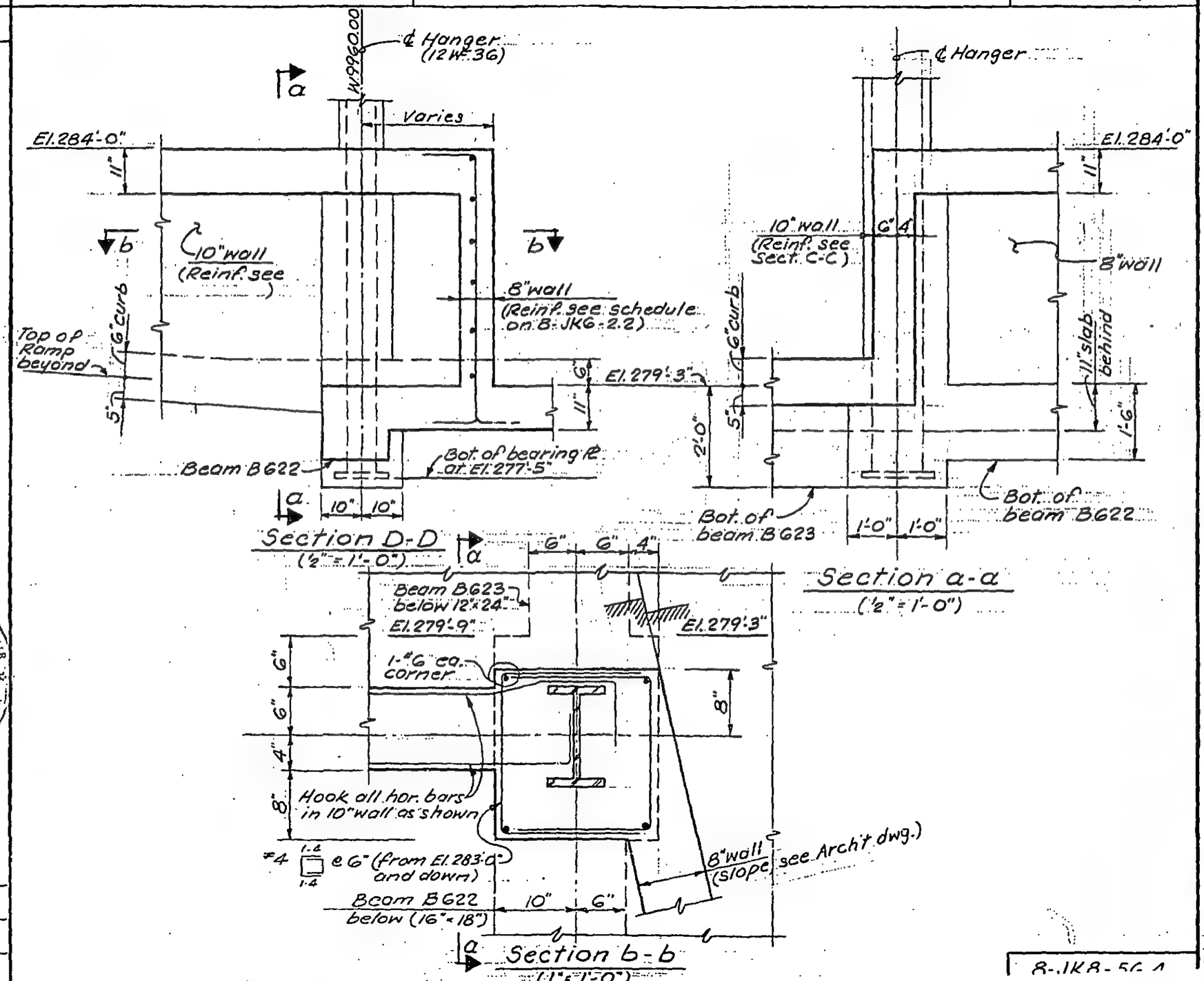

LICENSED PROFESSIONAL ENGINEER
LESLIE E. ROBERTSON
No. 34360
UNIVERSITY OF THE STATE OF NEW YORK

DESIGNED

DRAWN S.C.

REVIEWED E.L.

S-1KB-5C.1

SKILLING - HELLE - CHRISTIANSEN - ROBERTSON — Structural & Civil Engineers

PROJECT WORLD TRADE CENTER | TITLE SECTION AT EL. 279'-3" | DATE 7-18-69

REVISIONS

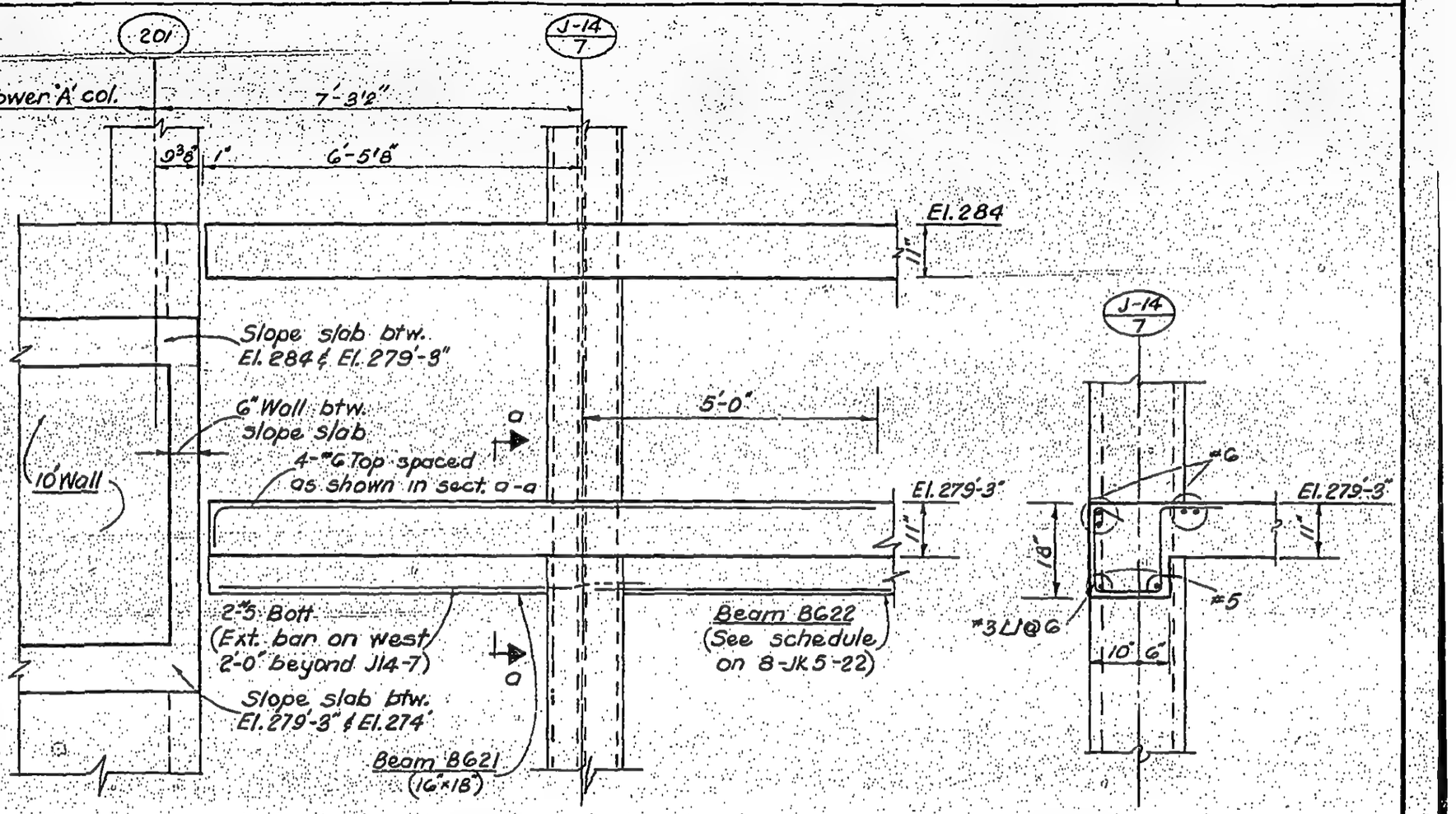

Section E-E
(½" = 1'-0")

Section a'-a
(½" = 1'-0")

LICENSED PROFESSIONAL ENGINEER
LESLIE E. ROBERTSON
No. 34960
UNIVERSITY OF THE STATE OF NEW YORK

DRAWN
D.U.

REVIEWED
E.L.

8'-JK8-56.5

SKILLING, HELLE, CHRISTIANSEN, ROBERTSON — Structural & Civil Engineers

PROJECT THE WORLD TRADE CENTER | TITLE SECTIONS AT EL. 279'-3" | DATE 9-23-69

REVISIONS

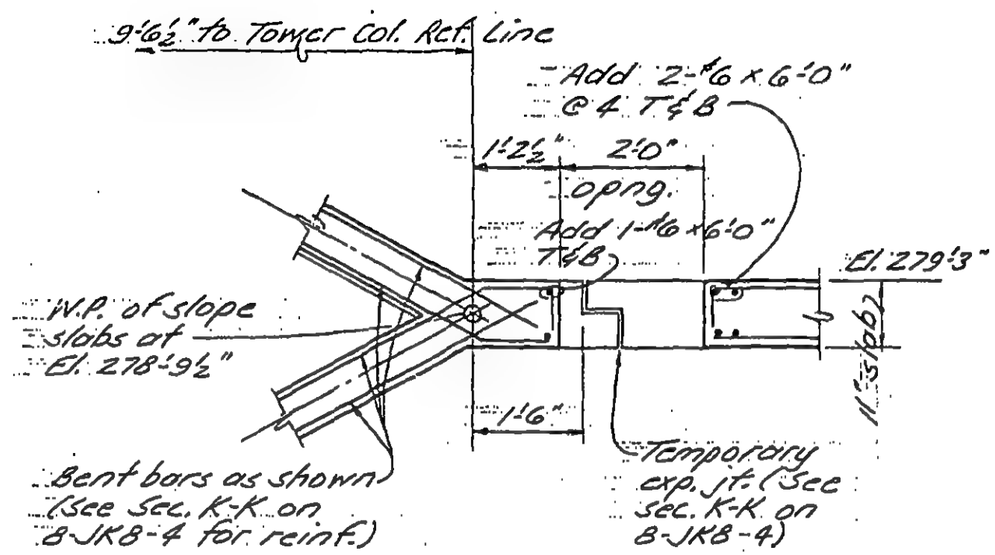

Section F-F
(½" = 1'-0")

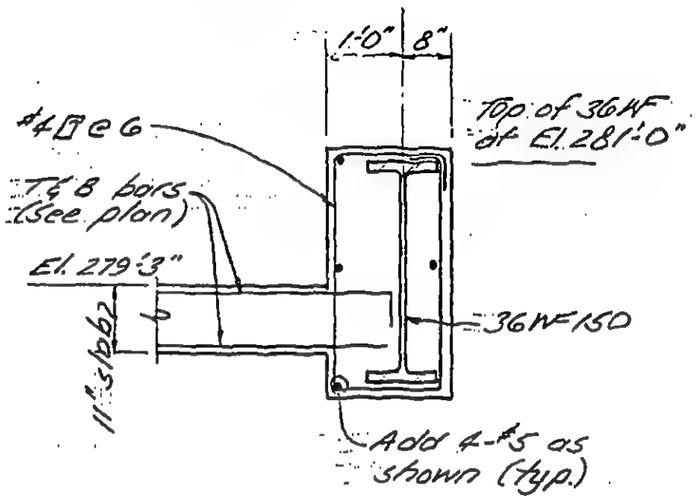

Section G-G
(½" = 1'-0")

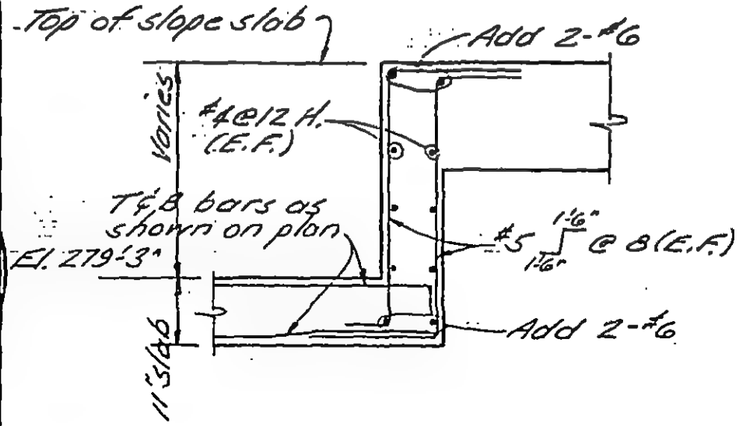

Section H-H
(½" = 1'-0")

LICENSED PROFESSIONAL ENGINEER
LESLIE E. ROBERTSON
No. 34360
UNIVERSITY OF THE STATE OF NEW YORK

DESIGNED

DRAWN J. Adams

REVIEWED E.L.

8-JKB-56.6

SKILLING, HELLE, CHRISTIANSEN, ROBERTSON — Structural & Civil Engineers

PROJECT THE WORLD TRADE CENTER | TITLE SECTION AT EL 279'-3" | DATE 9-23-69

REVISIONS

10-30-69

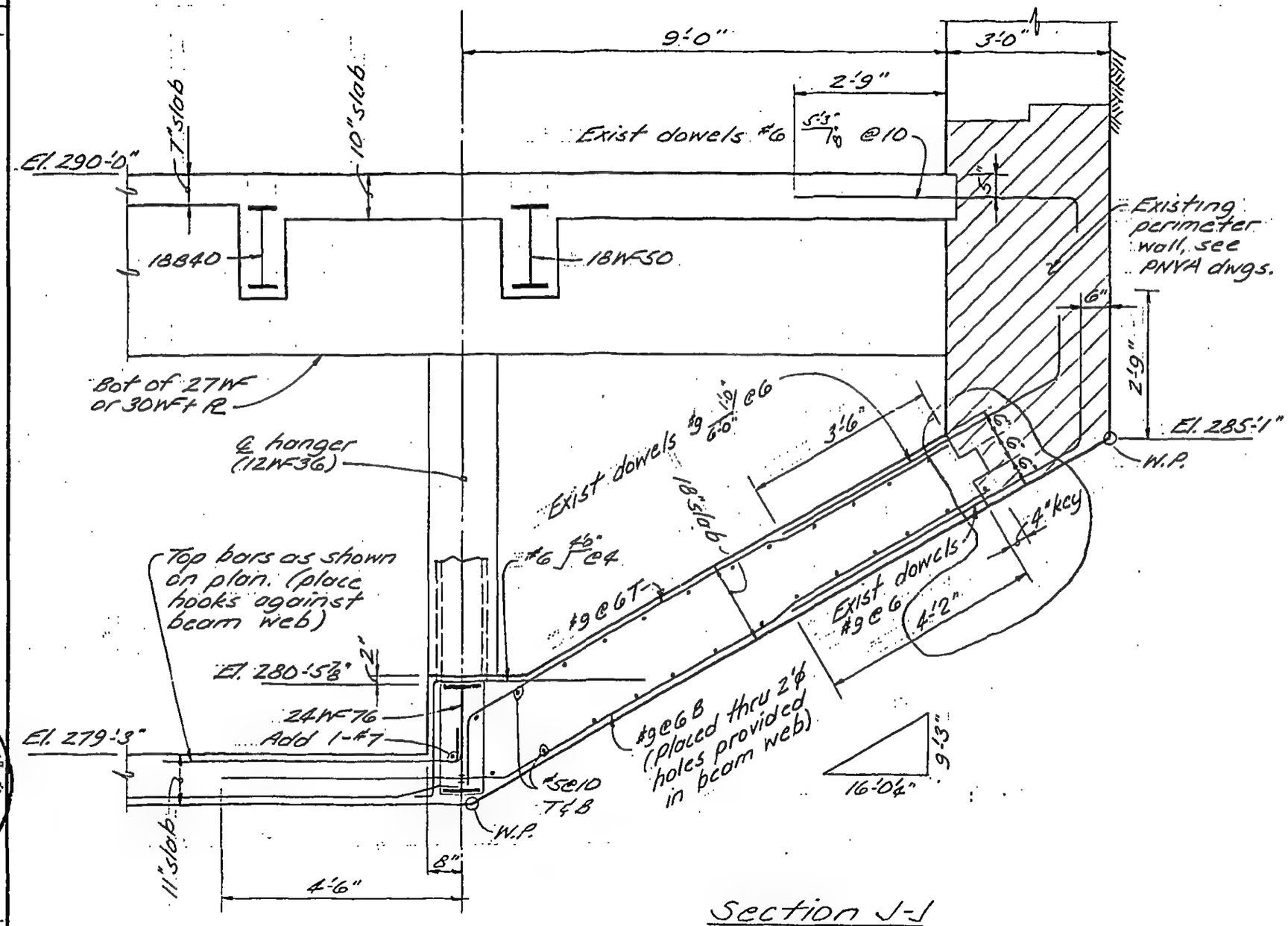

Section J-J
(½"=1'-0")

LICENSED PROFESSIONAL ENGINEER
LESLIE E. ROBERTSON
No. 34360
UNIVERSITY OF THE STATE OF NEW YORK

DESIGNED

DRAWN J. Adams

REVIEWED E.L.

8-JKB-56.7

SKILLING, HELLE, CHRISTIANSEN, ROBERTSON — Structural & Civil Engineers

PROJECT THE WORLD TRADE CENTER | TITLE SECTION AT EL. 279'-3" | DATE 11-25-69

REVISIONS

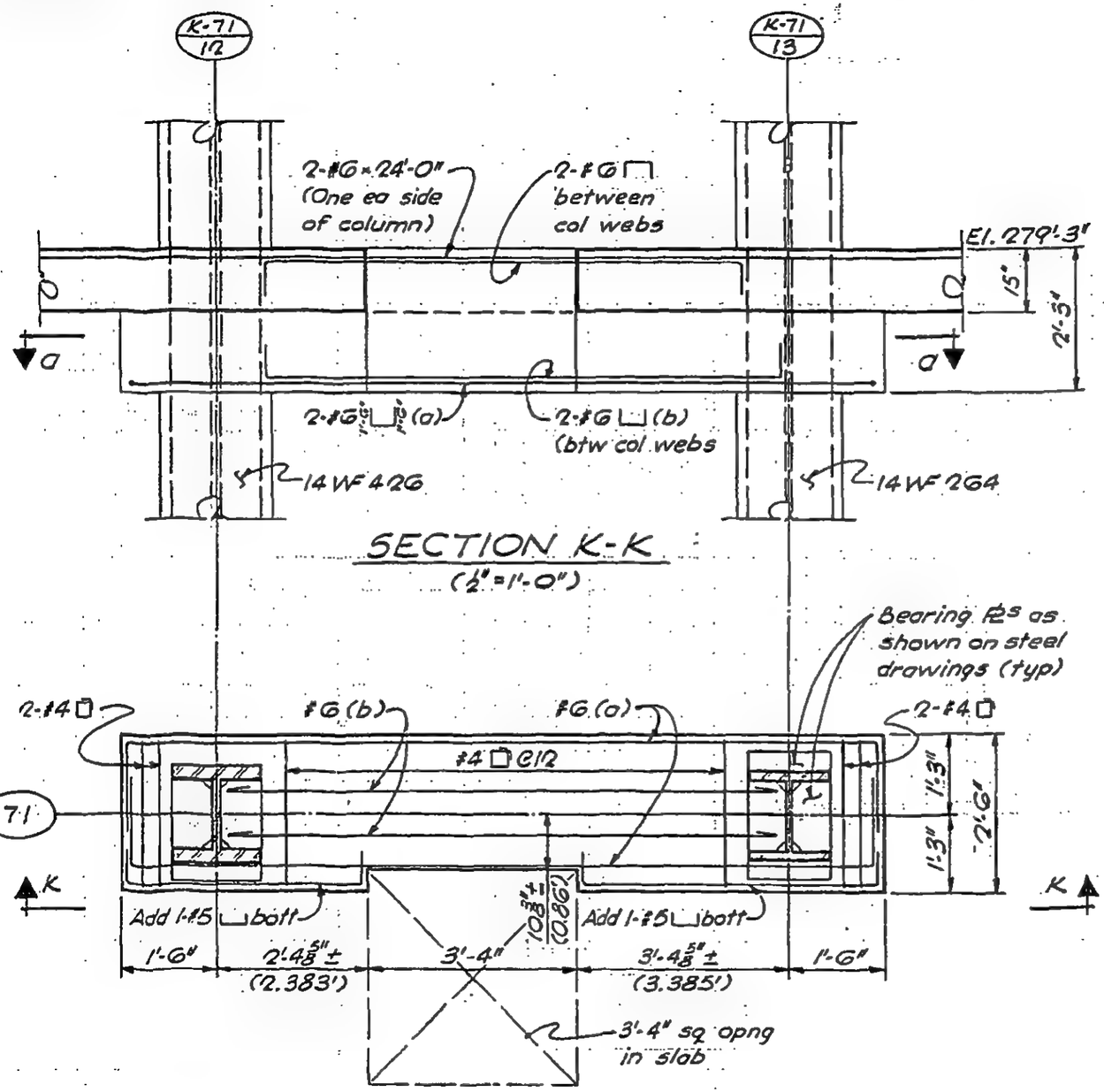

SECTION K-K
(½" = 1'-0")

SECTION a-a
(½" = 1'-0")

LICENSED PROFESSIONAL ENGINEER
LESLIE E. ROBERTSON
No. 34360
UNIVERSITY OF THE STATE OF NEW YORK

DESIGNED

DRAWN G.K.

REVIEWED E.L.

8-JK8-5G.8

SKILLING, HELLE, CHRISTIANSEN, ROBERTSON — Structural & Civil Engineers

PROJECT THE WORLD TRADE CENTER | TITLE SECTION AT EL. 279'-3" | DATE 11-25-69

REVISIONS

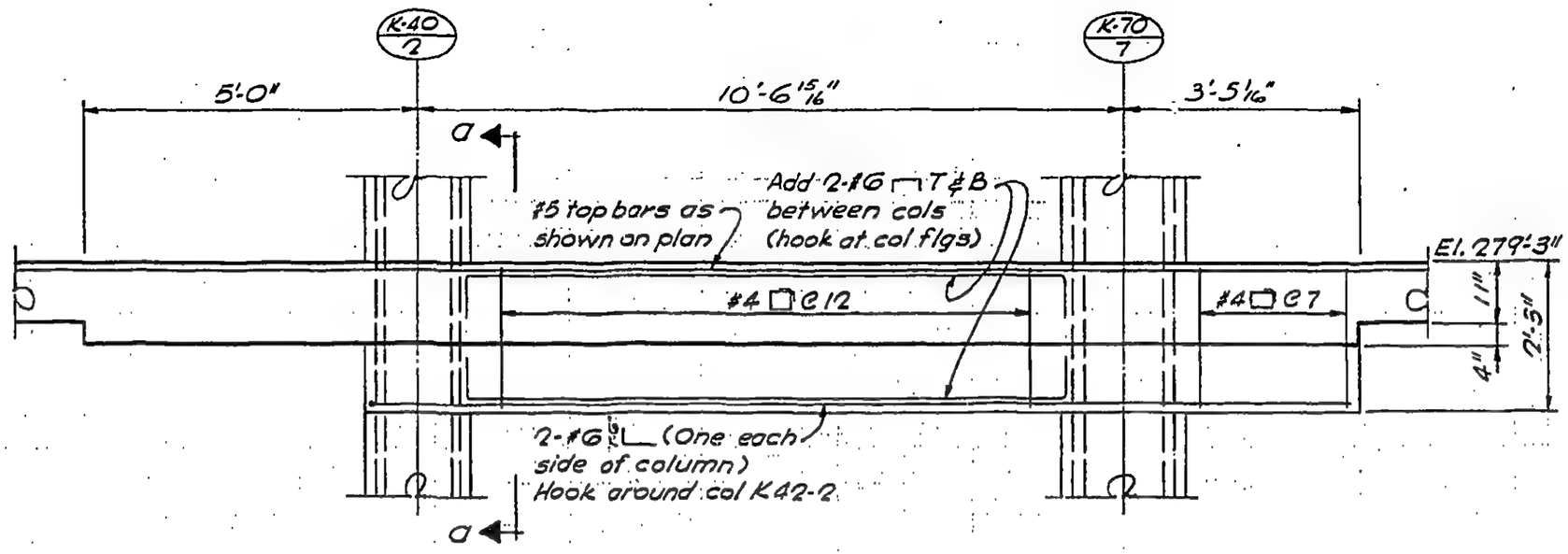

SECTION L-L

(½"=1'-0")

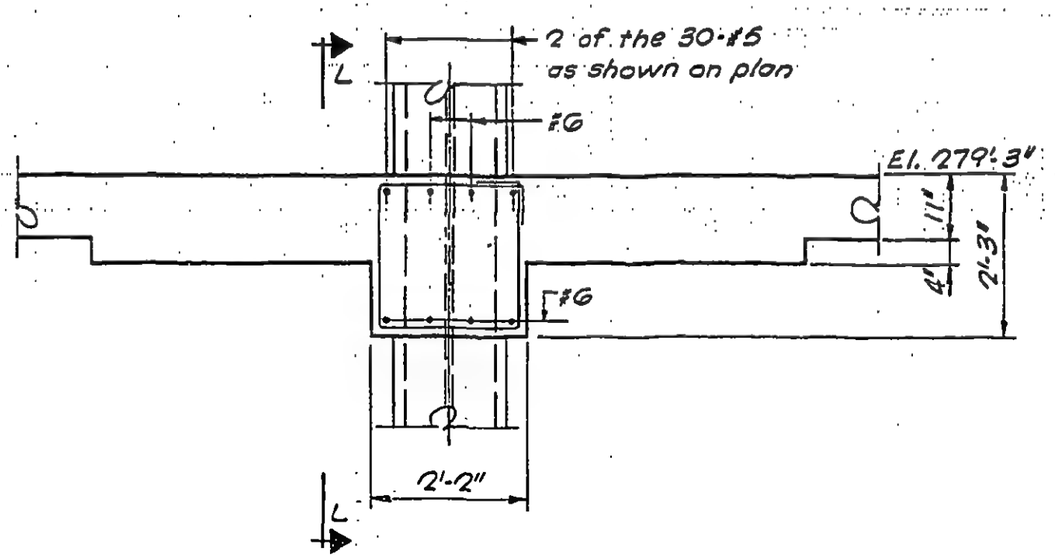

SECTION 0-0

(½"=1'-0")

LICENSED PROFESSIONAL ENGINEER
LESLIE E. ROBERTSON
No. 34360
UNIVERSITY OF THE STATE OF NEW YORK

DESIGNED

DRAWN G.K.

REVIEWED E.L.

8-JK8-56.9

SKILLING, HELLE, CHRISTIANSEN, ROBERTSON

PROJECT THE WORLD TRADE CENTER

TITLE SECTION A

REVISIONS

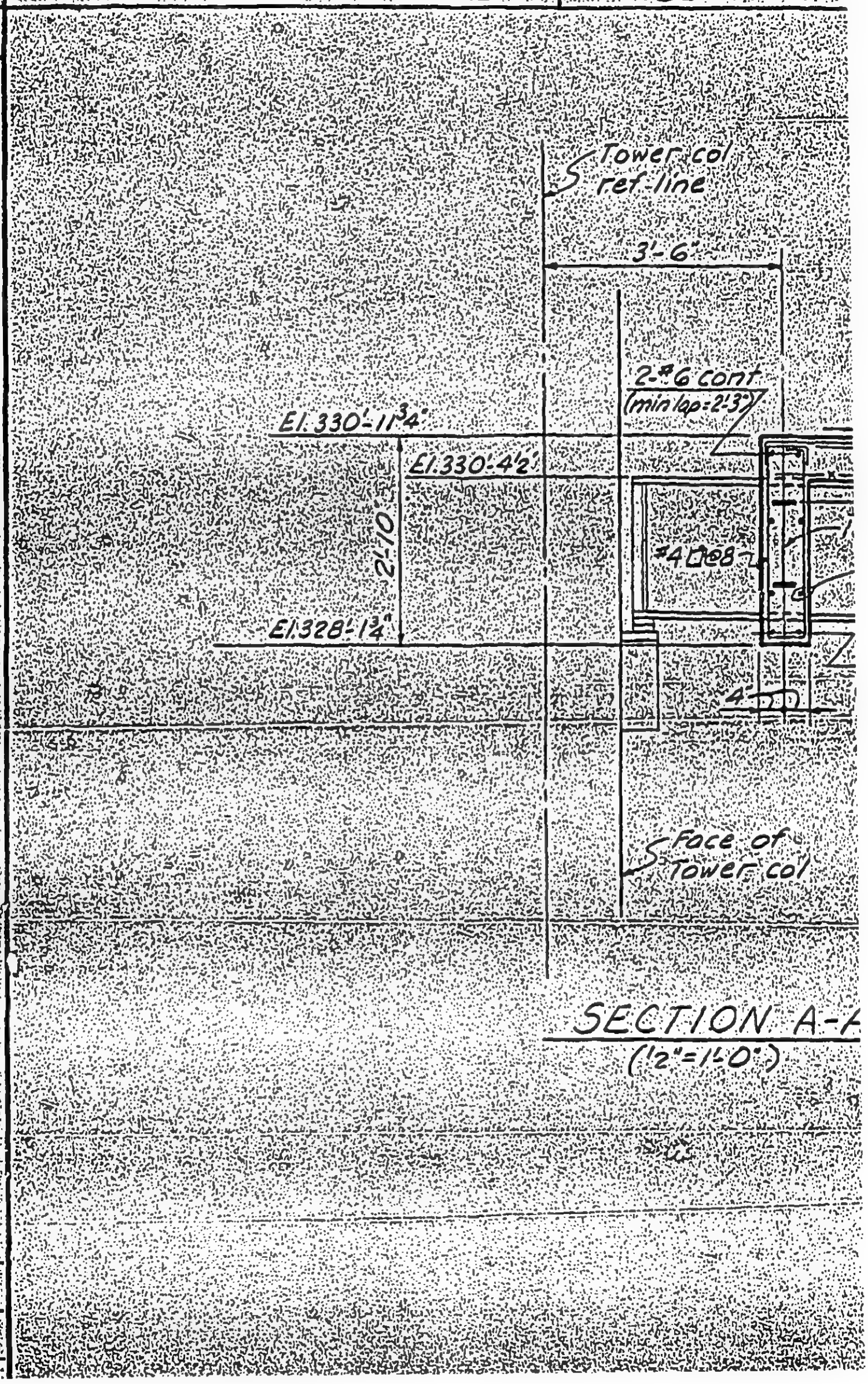

SECTION A-A

(12"=1'-0")

LICENSED PROFESSIONAL ENGINEER
LESLIE E. ROBERTSON
No. 34360
UNIVERSITY OF THE STATE OF NEW YORK

DESIGNED

DRAWN A.F.

REVIEWED

Structural & Civil Engineers

:TION AT EL 332'-0"

DATE 5-1-70

nt.
3')

Slab slopes down
See plan

El. 330'-0"

10B19

24WF55

2-#5 ea side
(Hook at WF)

2-#7 cont
(min lap = 2'-8")

Where 27WF84 occurs
hook #7 ea side of 27WF

of
r col

N A-A
o.)

SKILLING, HELLE, CHRISTIANSEN, ROBERTSON — Structural & Civil Engineers

PROJECT: THE WORLD TRADE CENTER | TITLE: SECTION AT EL. 332'-0" | DATE: 5-1-70

REVISIONS

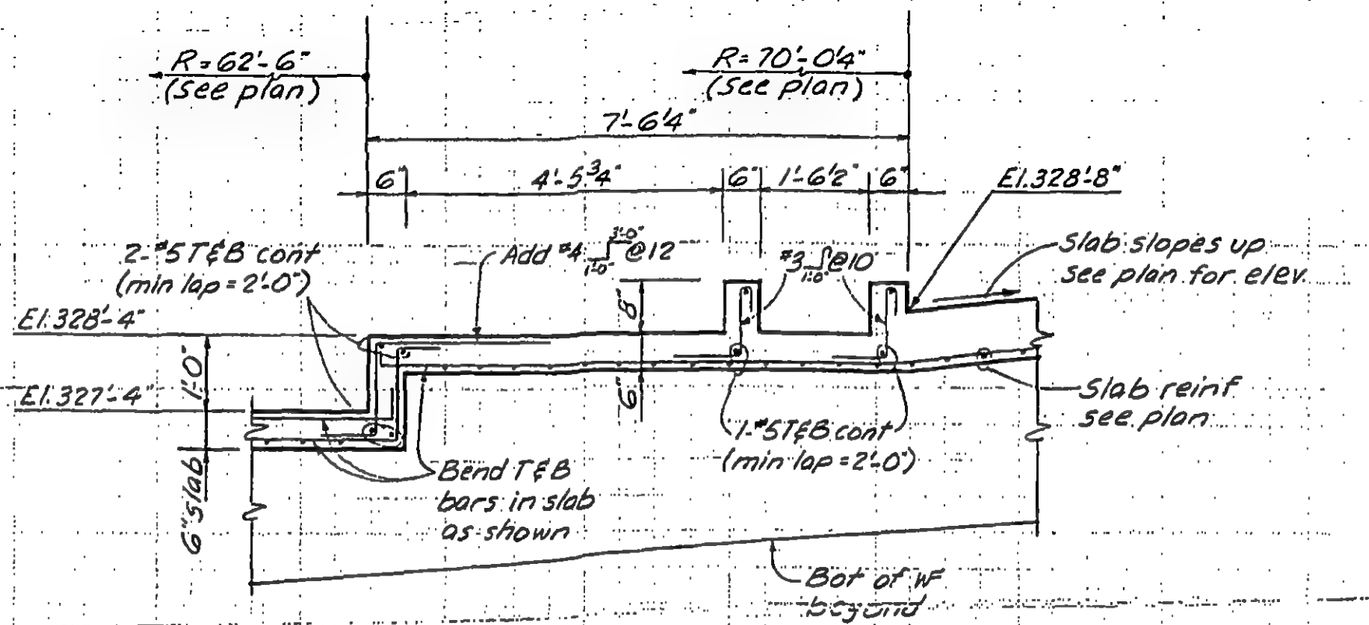

SECTION B-B
(½"=1'-0")

LICENSED PROFESSIONAL ENGINEER — LESLIE E. ROBERTSON — No. 34360 — UNIVERSITY OF THE STATE OF NEW YORK

DESIGNED

DRAWN A.F.

REVIEWED E.L.

8-JKB-57.2

SKILLING, HELLE, CHRISTIANSEN, ROBERTSON — Structural & Civil Engineers

PROJECT: THE WORLD TRADE CENTER | TITLE: SECTION AT EL.332'-0" | DATE: 5-1-70

REVISIONS

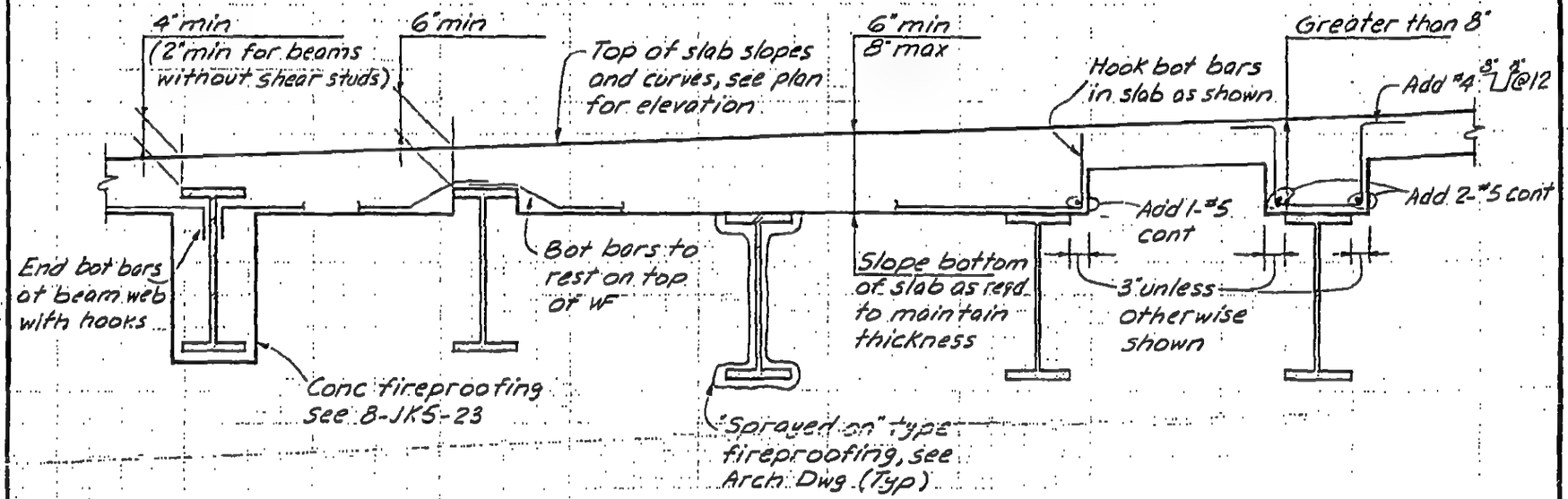

SECTION C-C
(No scale)

LICENSED PROFESSIONAL ENGINEER
LESLIE E. ROBERTSON
No. 34360
UNIVERSITY OF THE STATE OF NEW YORK

DESIGNED

DRAWN A.F.

REVIEWED E.L.

8-JK8-57.3

SKILLING, HELLE, CHRISTIANSEN, ROBERTSON — Structural & Civil Engineers

PROJECT: THE WORLD TRADE CENTER | TITLE: SECTION AT EL. 332'-0" | DATE: 5-1-70

REVISIONS

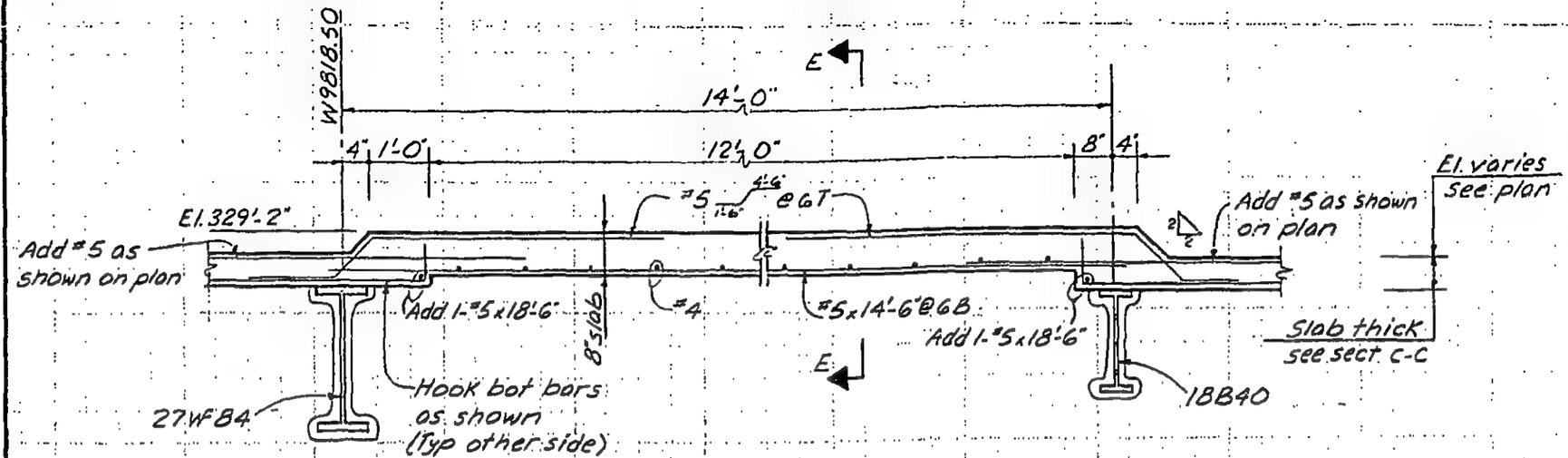

SECTION D-D
(1/2"=1'-0")

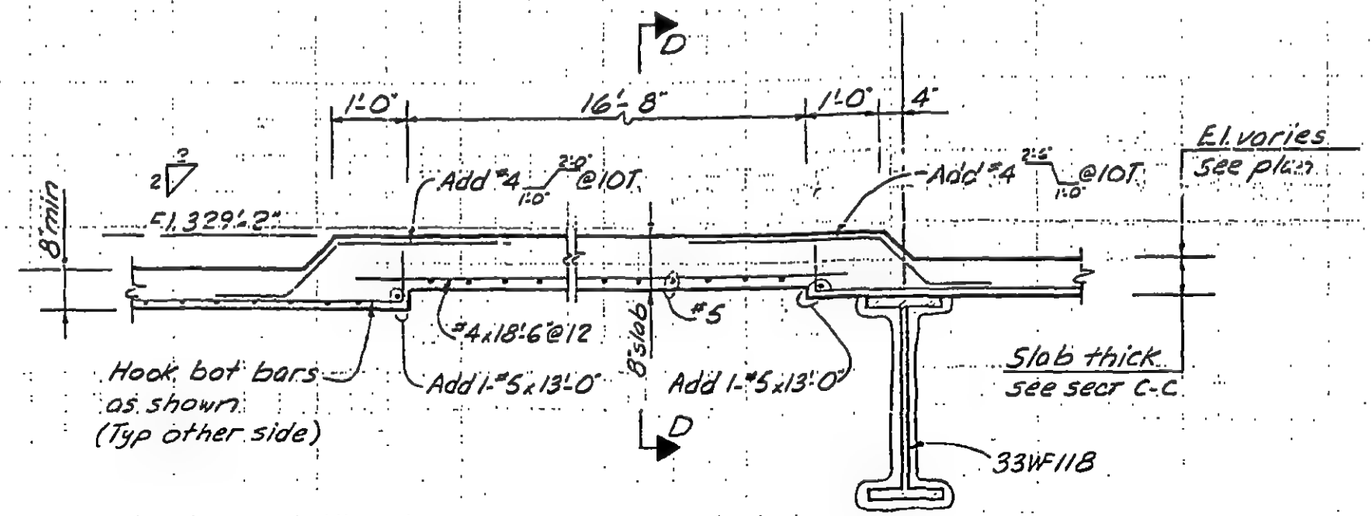

SECTION E-E
(1/2"=1'-0")

LICENSED PROFESSIONAL ENGINEER — LESLIE E. ROBERTSON — No. 34360 — UNIVERSITY OF THE STATE OF NEW YORK

DESIGNED

DRAWN A.F

REVIEWED E.L.

8-JK8-57.4

SKILLING, HELLE, CHRISTIANSEN, ROBERTSON — Structural & Civil Engineers

PROJECT THE WORLD TRADE CENTER | TITLE SECTION AT EL. 332'-0" | DATE 5-1-70

REVISIONS

5-15-70

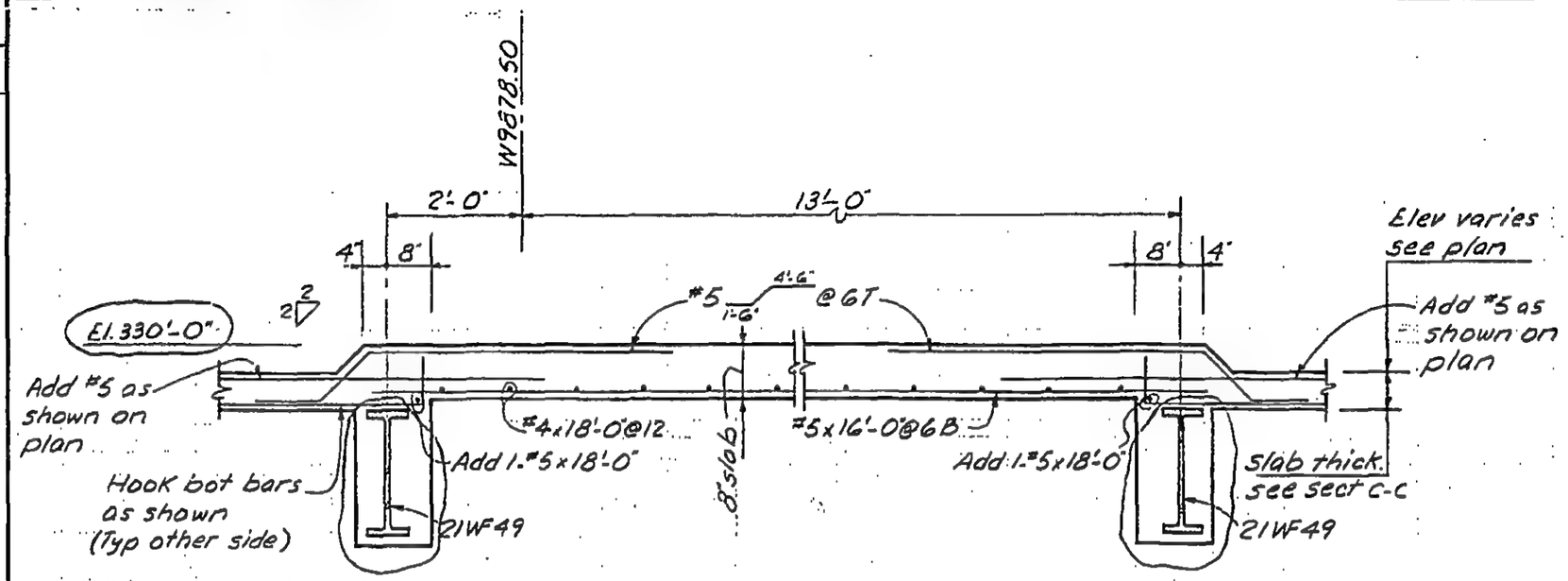

SECTION F-F
(1/2" = 1'-0")

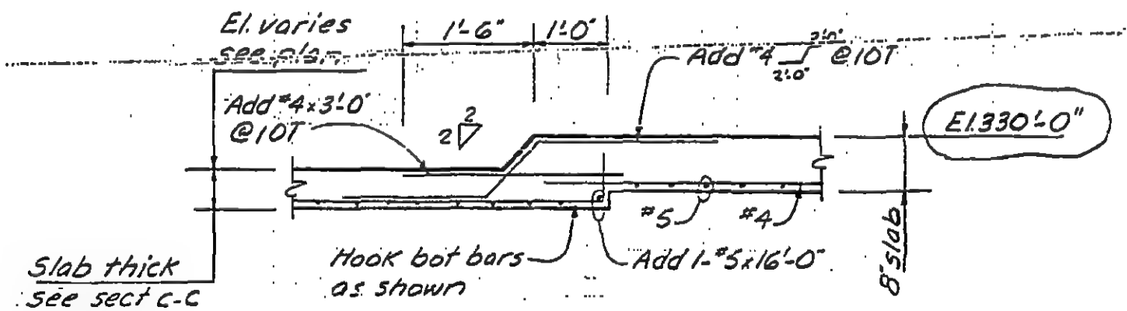

SECTION G-G
(1/2" = 1'-0")

LICENSED PROFESSIONAL ENGINEER — LESLIE E. ROBERTSON — No. 34360 — UNIVERSITY OF THE STATE OF NEW YORK

DESIGNED

DRAWN A.F.

REVIEWED E.L.

8-1K8-575

SKILLING, HELLE, CHRISTIANSEN, ROBERTSON — Structural & Civil Engineers

PROJECT THE WORLD TRADE CENTER | TITLE SECTION AT EL 332'-0" | DATE 5-1-70

REVISIONS

3-9-71

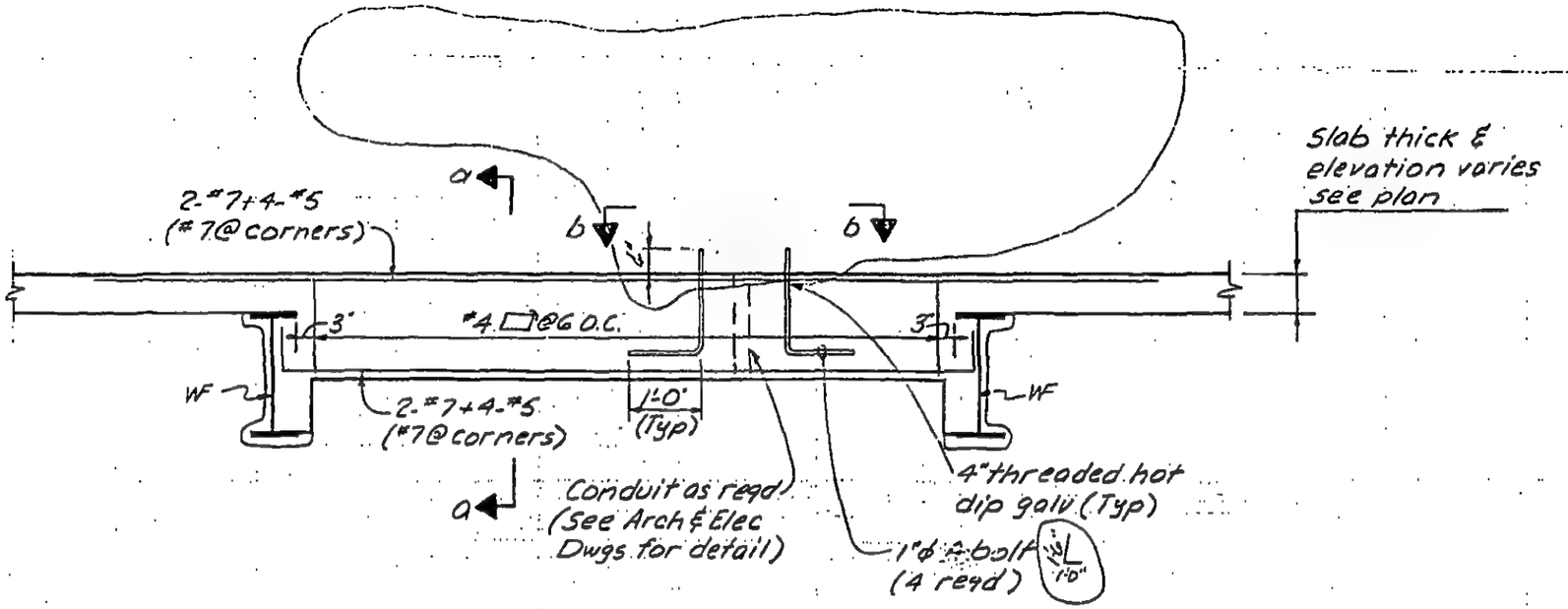

SECTION H-H
(1/2"=1'-0")

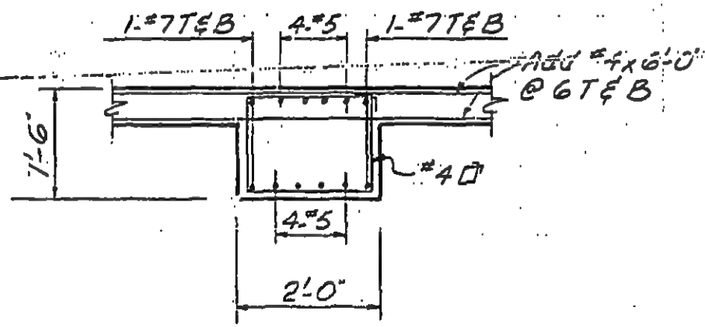

Section a-a
(1/2"=1'-0")

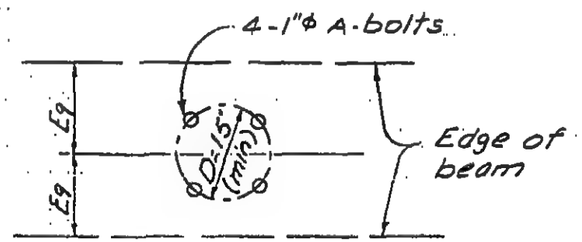

Section b-b
(1/2"=1'-0")

LICENSED PROFESSIONAL ENGINEER LESLIE E. ROBERTSON No. 34360 UNIVERSITY OF THE STATE OF NEW YORK

DESIGNED

DRAWN A.F.

REVIEWED E.L.

8-JK8-57.6

SKILLING, HELLE, CHRISTIANSEN, ROBERTSON — Structural & Civil Engineers

PROJECT: THE WORLD TRADE CENTER | TITLE: CONCRETE DETAILS - EL. 332 | DATE: 3-2-71

REVISIONS

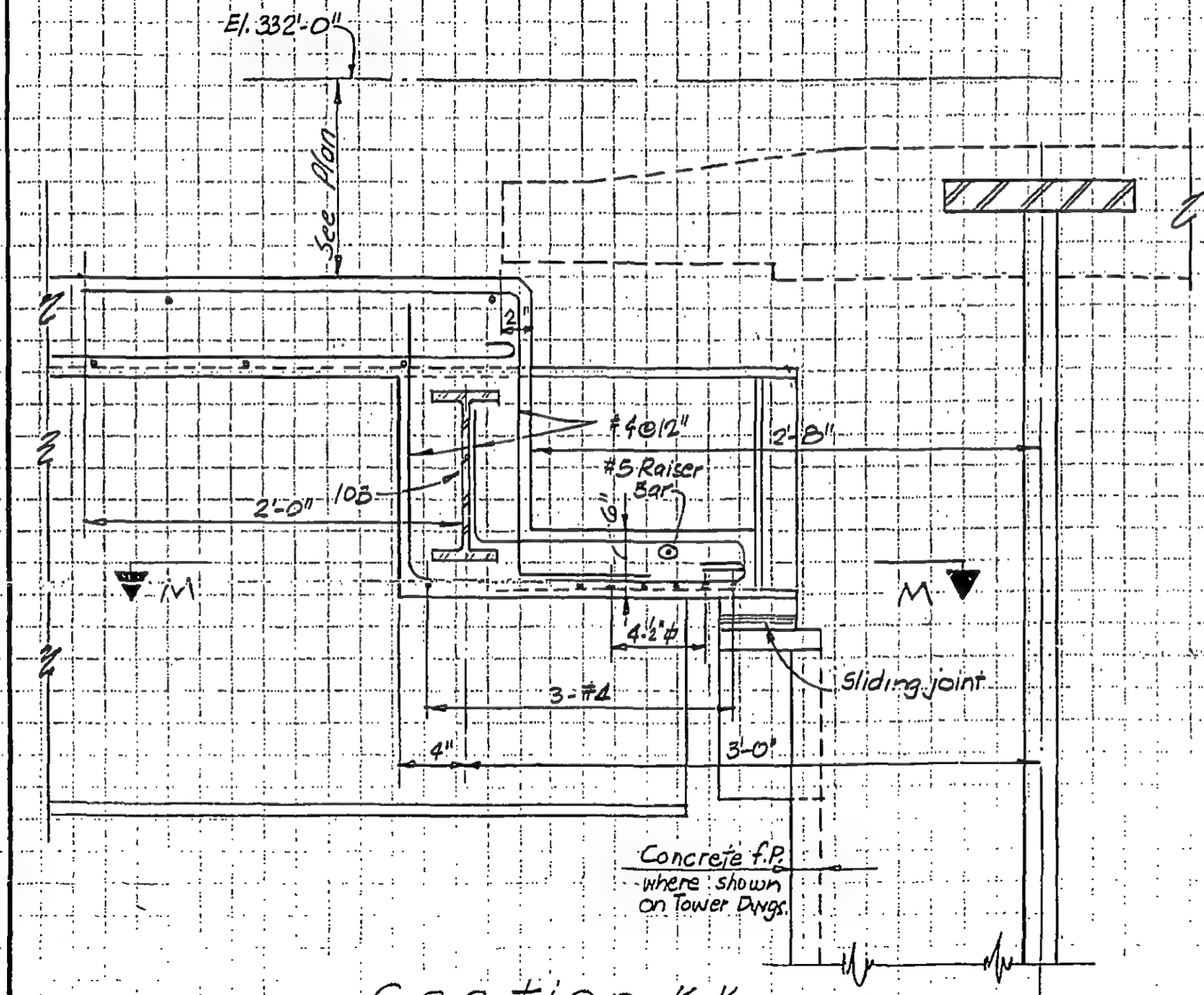

Section K-K

LICENSED PROFESSIONAL ENGINEER — LESLIE E. ROBERTSON — No 34360 — UNIVERSITY OF THE STATE OF NEW YORK

DESIGNED

DRAWN pozelsi

REVIEWED

8-JK8-57.7

SKILLING, HELLE, CHRISTIANSEN, ROBERTSON — Structural & Civil Engineers

PROJECT: THE WORLD TRADE CENTER | TITLE: CONCRETE DETAILS — EL. 332 | DATE: 3-2-71

REVISIONS

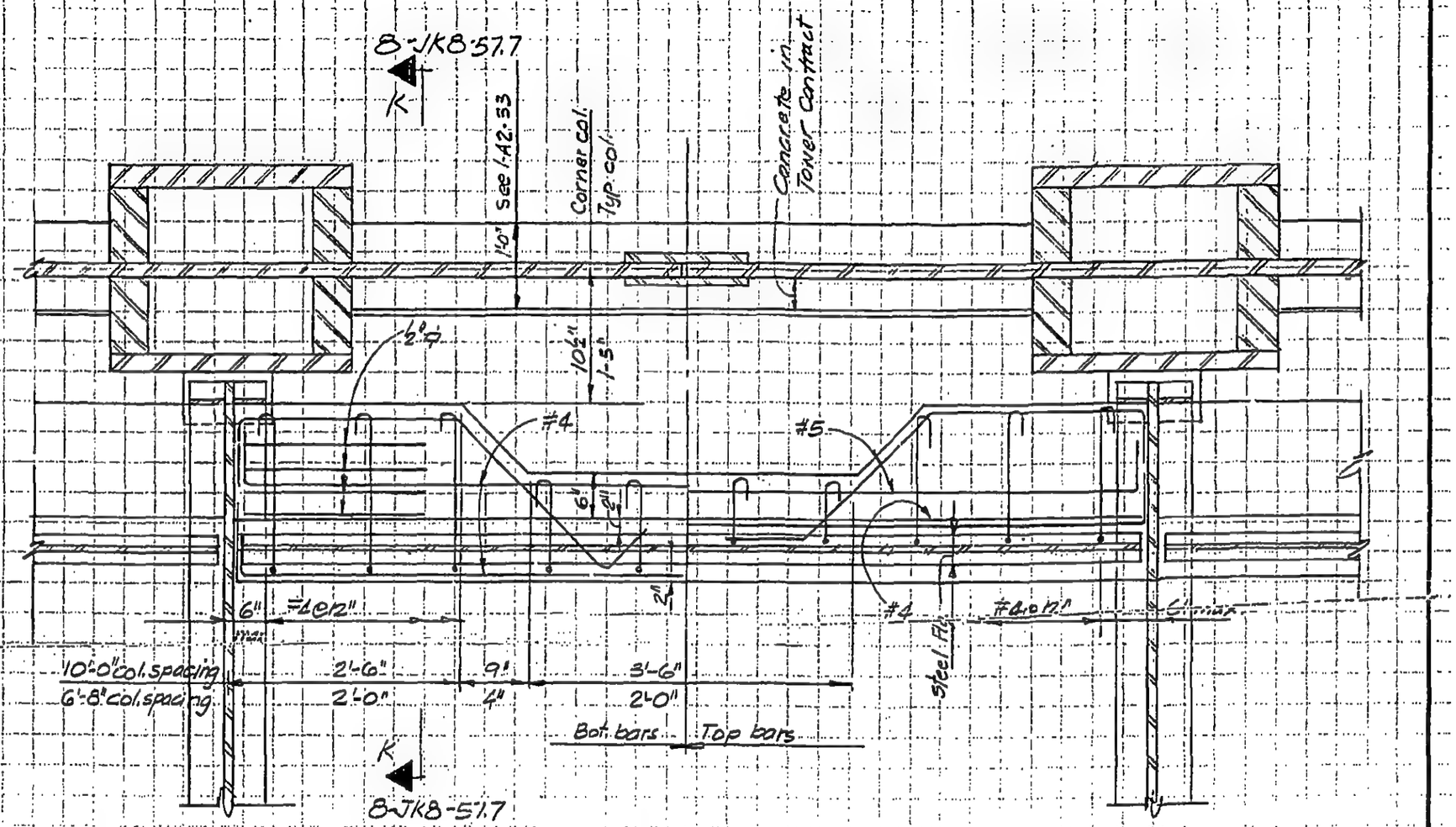

Horizontal Section M-M

LICENSED PROFESSIONAL ENGINEER — LESLIE E. ROBERTSON — No. 34360 — UNIVERSITY OF THE STATE OF NEW YORK

DESIGNED

DRAWN P. Orelli

REVIEWED

8-JK8-57.8

SKILLING, HELLE, CHRISTIANSEN, ROBERTSON — Structural & Civil Engineers

PROJECT: THE WORLD TRADE CENTER | TITLE: CONCRETE DETAILS, EL 332 | DATE: 3-2-71

REVISIONS

4-9-71
Release for construction

12/8/72

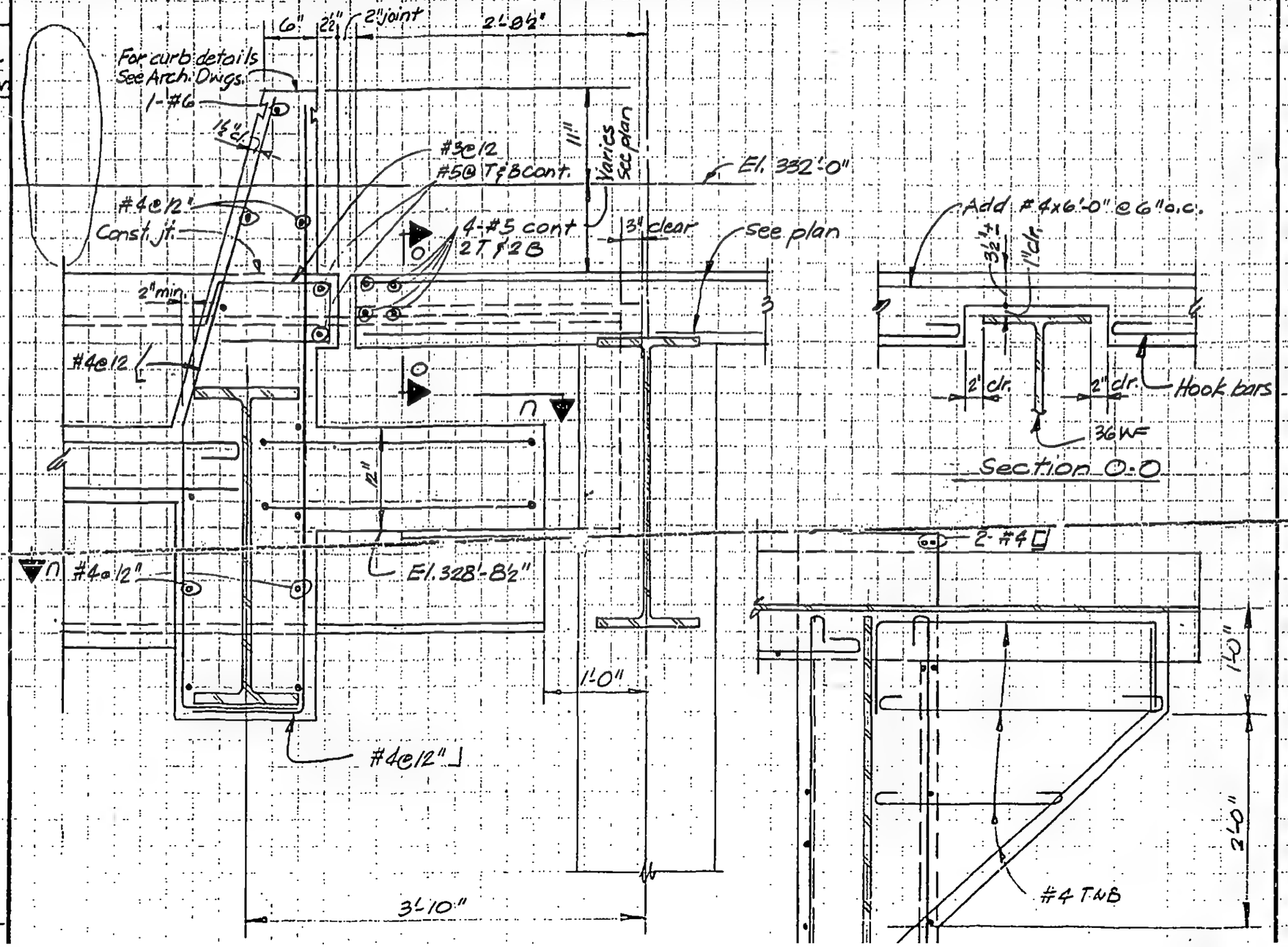

LICENSED PROFESSIONAL ENGINEER
LESLIE E. ROBERTSON
No. 34360
UNIVERSITY OF THE STATE OF NEW YORK

DESIGNED

SKILLING, HELLE, CHRISTIANSEN, ROBERTSON — Structural & Civil Engineers

PROJECT: THE WORLD TRADE CENTER | TITLE: CONCRETE DETAILS - EL. 332 | DATE: 3-2-71

REVISIONS

4-9-71 Release for construction

12-[illegible]-72

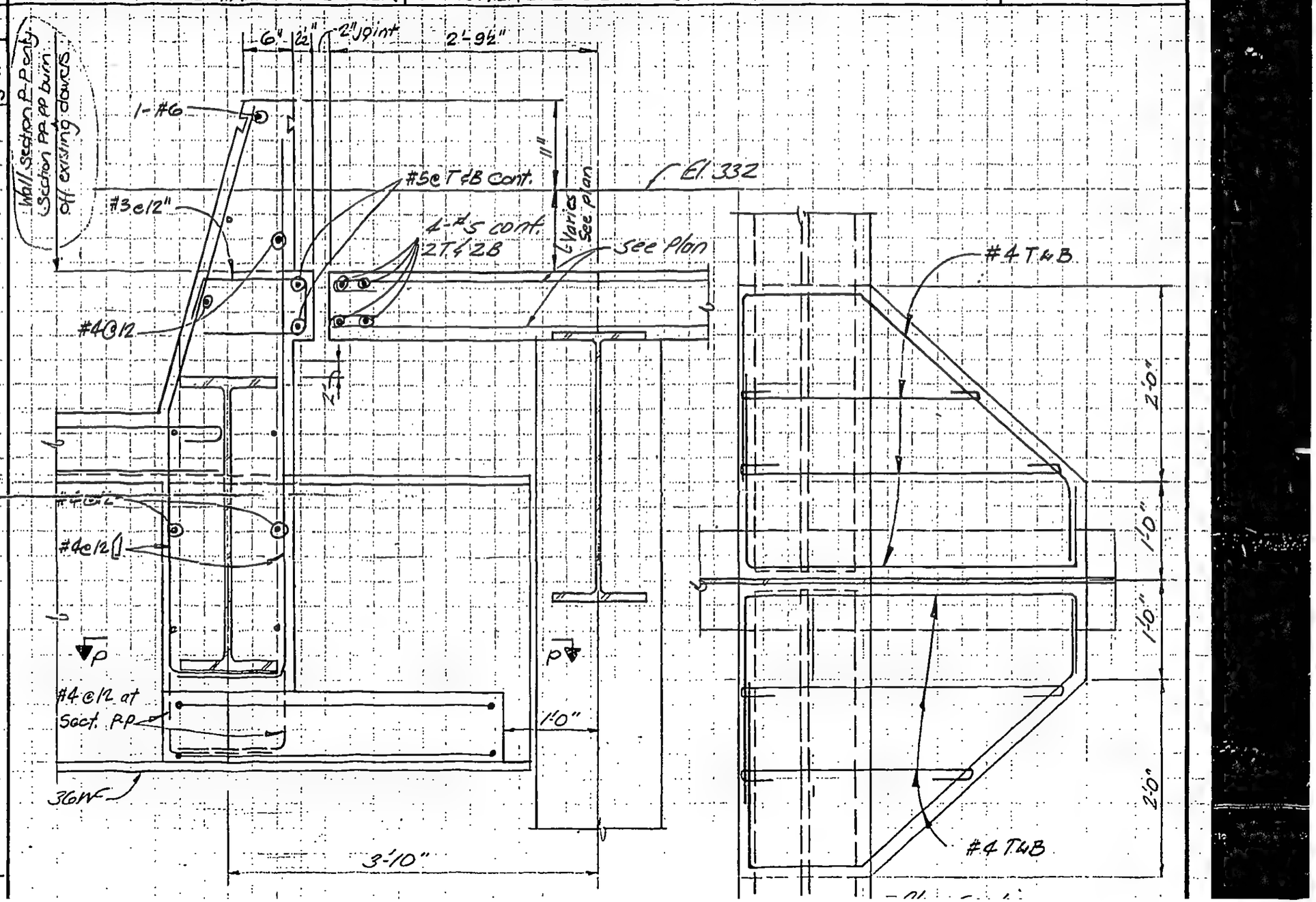

LICENSED PROFESSIONAL ENGINEER
LESLIE E. ROBERTSON
No. 34360
UNIVERSITY OF THE STATE OF NEW YORK

DESIGNED

SKILLING, HELLE, CHRISTIANSEN, ROBERTSON — Structural & Civil Engineers

PROJECT: THE WORLD TRADE CENTER | TITLE: CONCRETE DETAILS - EL. 332 | DATE: 3-2-71

REVISIONS

4-9-71 Release for construction

10-7-71

12-8-72

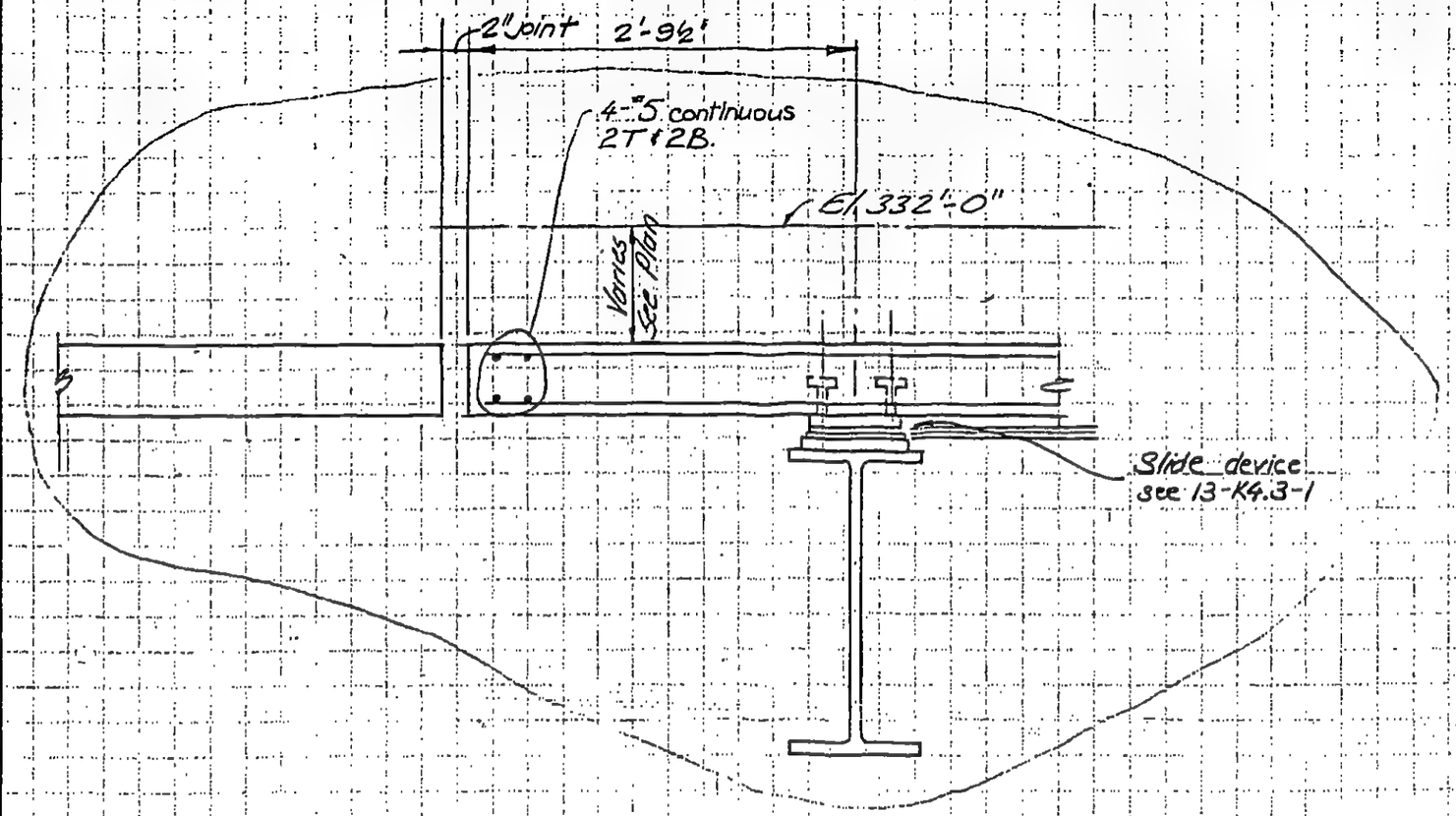

Section Q-Q

LICENSED PROFESSIONAL ENGINEER LESLIE E. ROBERTSON No. 34360 UNIVERSITY OF THE STATE OF NEW YORK

DESIGNED H. Roet

DRAWN [signature]

REVIEWED

8-JK8-5711

SKILLING, HELLE, CHRISTIANSEN, ROBERTSON — Structural & Civil Engineers

PROJECT THE WORLD TRADE CENTER | TITLE CONCRETE DETAILS - EL. 332 | DATE 4-9-71.

REVISIONS

12/8/72
7/27/73
9-19-73
10-21-74

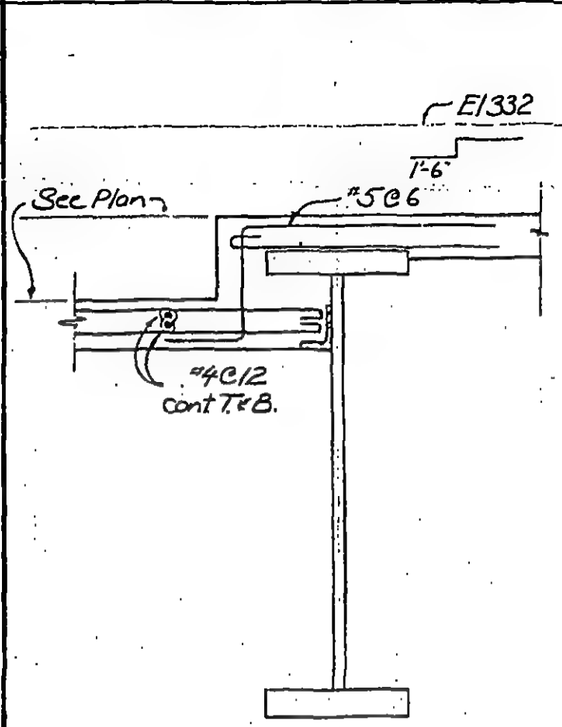

Section X-X

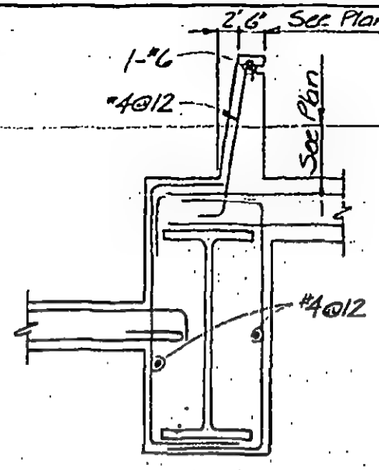

Section Y-Y

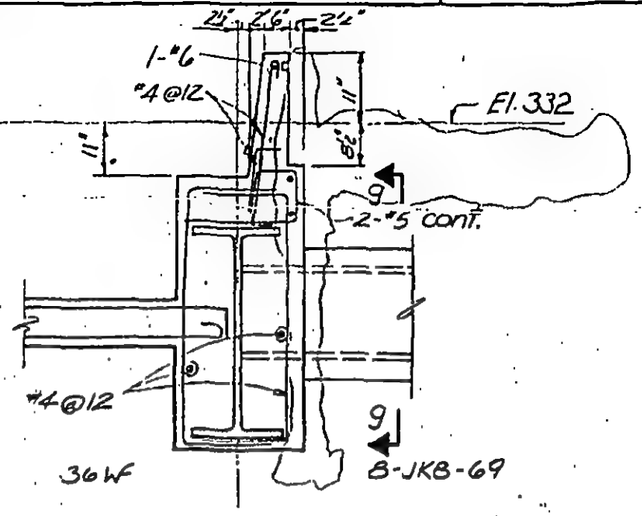

Section Y-Y

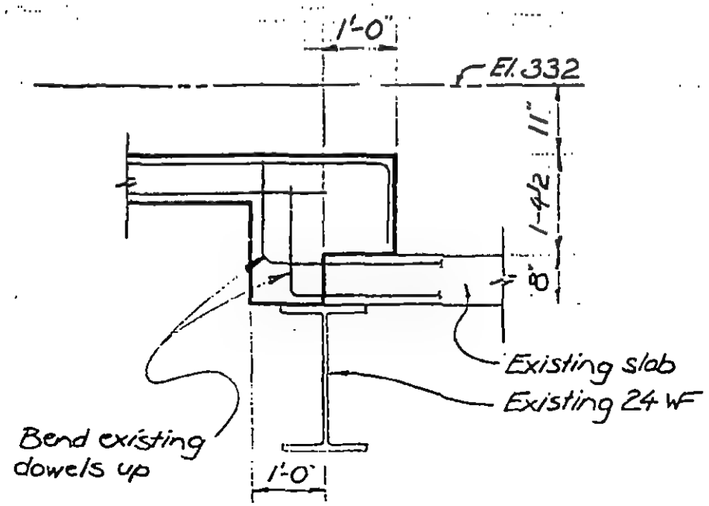

Section Z-Z

LICENSED PROFESSIONAL ENGINEER
LESLIE E. ROBERTSON
No 34360
UNIVERSITY OF THE STATE OF NEW YORK

DESIGNED, WAB
DRAWN J Banks
REVIEWED JTM

8JK8-57.12.

SKILLING, HELLE, CHRISTIANSEN, ROBERTSON — Structural & Civil Engineers

PROJECT: THE WORLD TRADE CENTER | TITLE: CONCRETE DETAILS - EL 332 | DATE: 3-2-71

REVISIONS

4-9-71 Release for construction

10-7-71

1-15-72

12-8-72

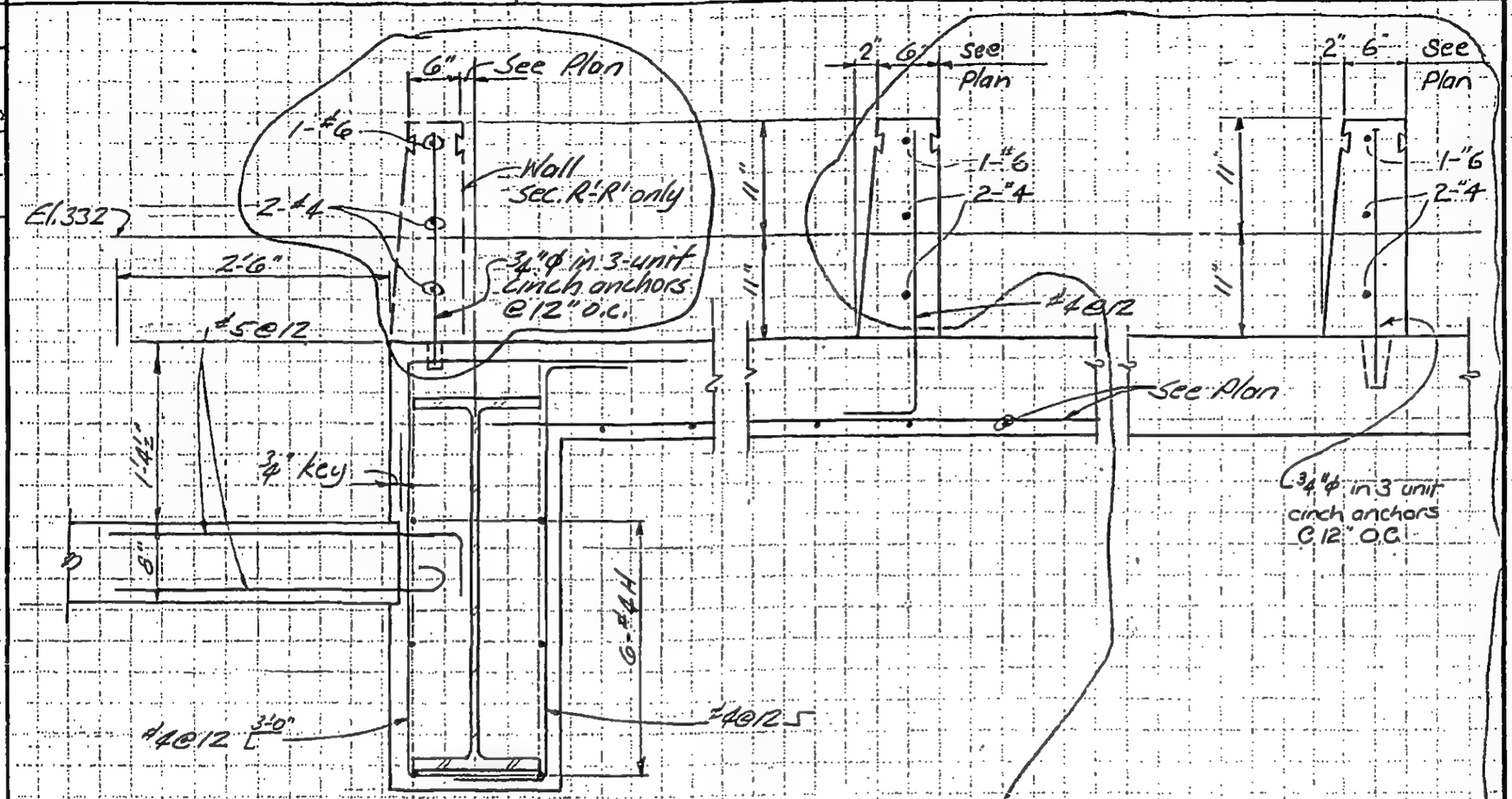

Section R-R

Section R'-R' as noted

Section RR-RR

Section RRR-RRR

LICENSED PROFESSIONAL ENGINEER — LESLIE E. ROBERTSON — No. 34360 — UNIVERSITY OF THE STATE OF NEW YORK

DESIGNED

DRAWN

REVIEWED W Brewer

8-JKB-5713

SKILLING, HELLE, CHRISTIANSEN, ROBERTSON — Structural & Civil Engineers

PROJECT: THE WORLD TRADE CENTER | TITLE: CONCRETE DETAILS - EL. 332 | DATE: 4-9-71

REVISIONS

10-7-71

12-8-72

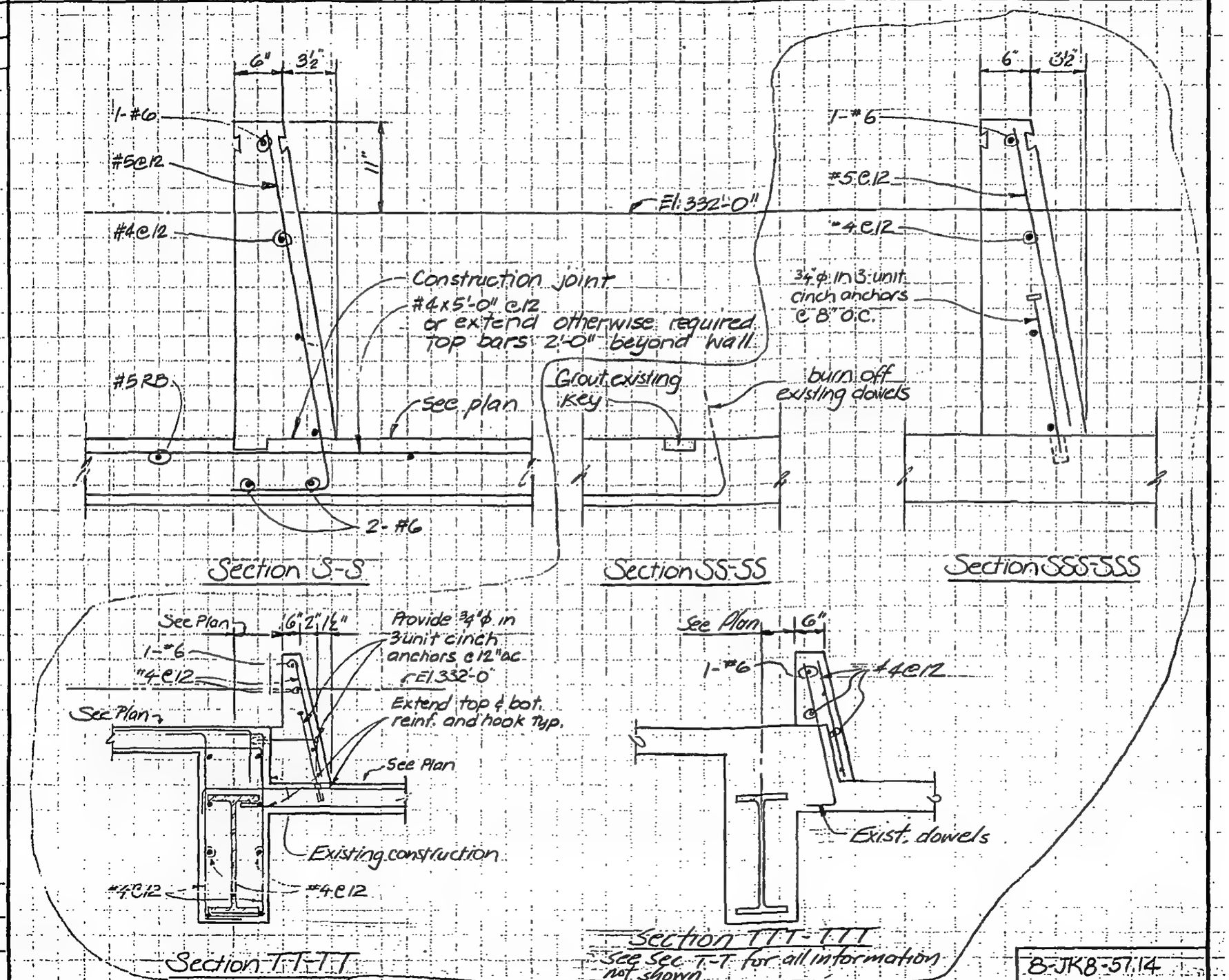

8-JK8-57.14

LICENSED PROFESSIONAL ENGINEER
LESLIE E. ROBERTSON
No. 34360
UNIVERSITY OF THE STATE OF NEW YORK

DESIGNED

DRAWN

REVIEWED

SKILLING, HELLE, CHRISTIANSEN, ROBERTSON · Structural & Civil Engineers

PROJECT THE WORLD TRADE CENTER | TITLE CONCRETE DETAILS EL. 332 | DATE 10-7-71

REVISIONS

12-8-72

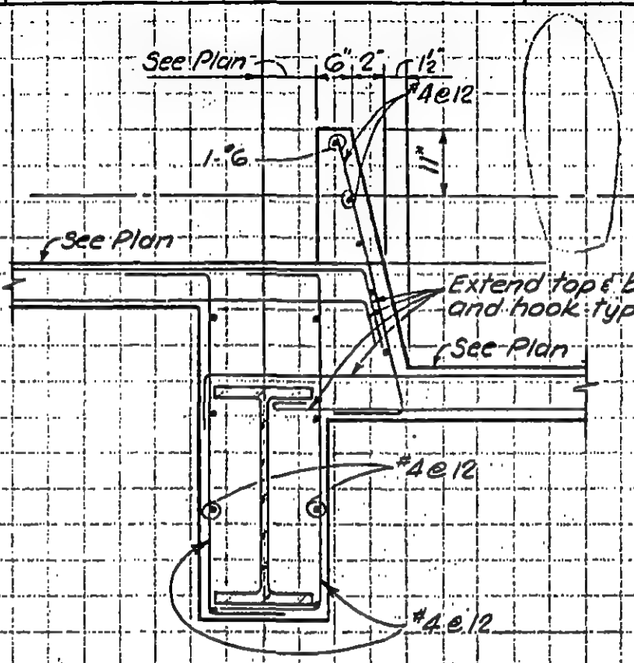

Section T-T

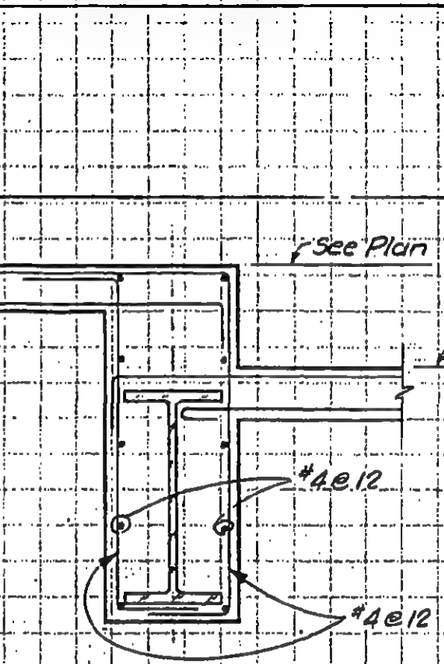

Section U-U

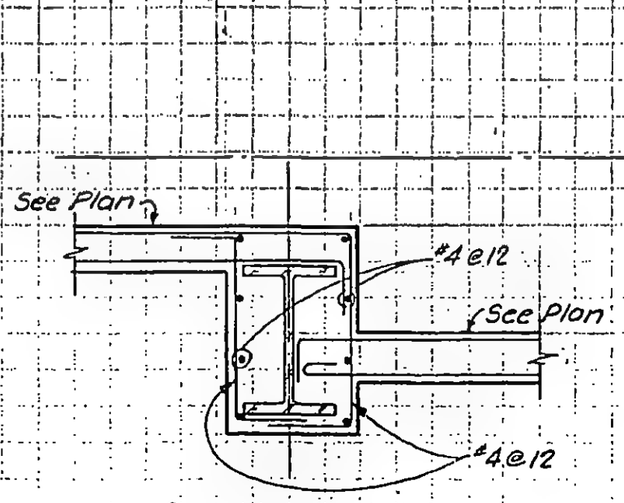

Section V-V

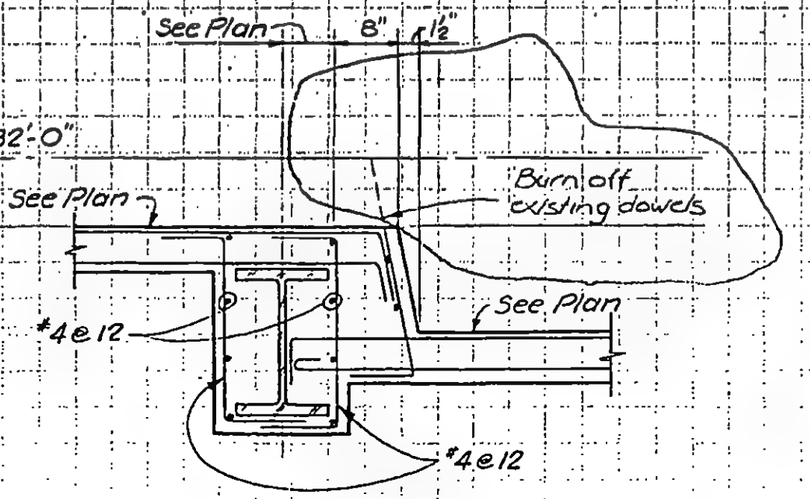

Section W-W

LICENSED PROFESSIONAL ENGINEER
LESLIE E. ROBERTSON
No. 34360
UNIVERSITY OF THE STATE OF NEW YORK

DESIGNED

SKILLING, HELLE, CHRISTIANSEN, ROBERTSON — Structural & Civil Engineers

PROJECT: THE WORLD TRADE CENTER

TITLE: PROCEDURE OF FLOOR CONSTRUCTION @ EL 284 (ZONE J-4)

DATE: 9-30-70

REVISIONS

W100 50.00

W100 22.00

W99 90.00

Temporary exp. jt. already grouted

Temporary shorings to remain in place until after completion of "gap" thru 10" wall.

12-#5T
22-#6T
12-#5B
18-#5B
15-#5T
22-#6T
14-#5B
21-#5B
18-#6T
28-#6T

Det. 2
8-JK8-4.11
Sect. D-D
8-JK8-4

7

12-#5T
18-#6T
J-7 / 10
X
Pour #2
12-#5T
J-7 / 11
18-#6T
X
12-#5T
8-JK5-14.1
6'-8"
16-#6T
J
J-7 / 13

"Gap" thru wall & sloping slabs shall not be poured until after closing of adjacent exp. joints

8-JK8-58.5

14-#5T
14-#5B
12-#5B
15-#5B
12-#5B
14-#5T
14-#5B
Temp. exp. jts
18-#6T
8-JK5-14.1
6'-8"
15-#5B
8-JK5-14.1
Temp exp. jt.
20-#5B
10-#5B
10" wall

12-#6T

Provide 2-#6 x 5'-0" T & B ea. corner of opng

11-#5B
5-#5T
5-#5T
12-#5T
4-#5B
4-#6T
2-#6 T&B ea. side
J-8 / 10
J
Sect. D-D
8-JK8-4
11-#5B
5-#5T
12-#6T

6'-8"
19-#5B
18-#6T
22-#6T
J-8 / 8
J-8 / 9
12-#5T
Pour #1
8-JK5-14.1

8

Hatched area already constructed (typical)

14-#5T
14-#5B
5-#5T
18-#6T
8-JK5-6
8-JK5-6
15-#5B
12-#5B
8-#5B

Shorings under the entire Pour Area #1 & the adjacent temporary supports as shown, shall not be removed until after completion of the temporary opening.

Provide proper "pour-holes" for the construction of wall below after removal of existing PATH tube

Temporary opening

LICENSED PROFESSIONAL ENGINEER
LESLIE E. ROBERTSON
No. 34360
UNIVERSITY OF THE STATE OF NEW YORK

DESIGNED

Notes:

1. Number of reinforcing bars shown

SKILLING, HELLE, CHRISTIANSEN, ROBERTSON — Structural & Civil Engineers

PROJECT: THE WORLD TRADE CENTER | TITLE: PROCEDURE OF FLOOR CONSTRUCTION @ EL. 290 (ZONE J-4) | DATE: 9-30-70

REVISIONS

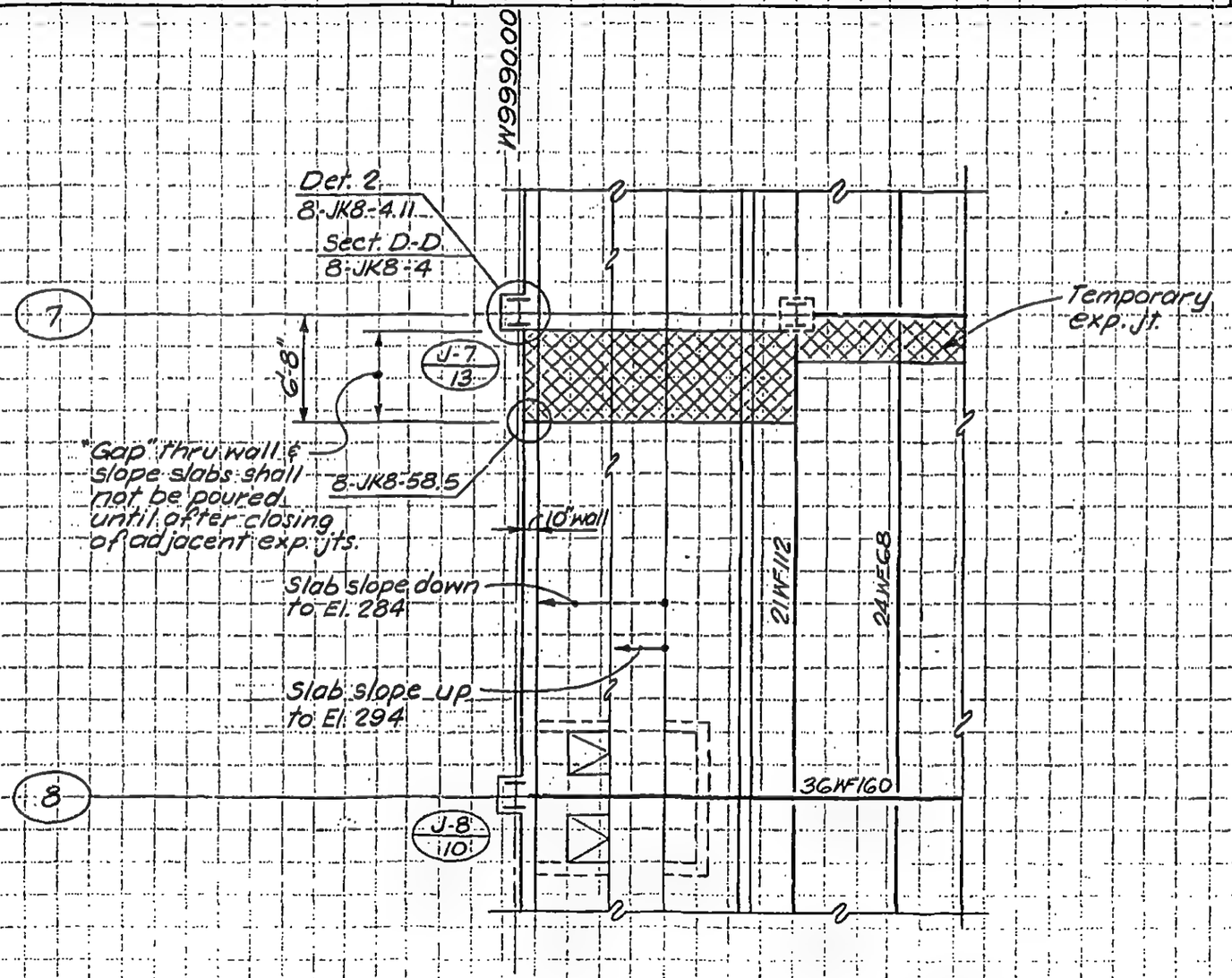

Notes:

1. See SCJ-76 for other information not shown.
2. See also 8-JK8-58.4

LICENSED PROFESSIONAL ENGINEER
LESLIE E. ROBERTSON
No. 34360
UNIVERSITY OF THE STATE OF NEW YORK

DESIGNED

SKILLING, HELLE, CHRISTIANSEN, ROBERTSON — Structural & Civil Engineers

PROJECT: THE WORLD TRADE CENTER

TITLE: PROCEDURE OF FLOOR CONSTRUCTION @ EL. 294 (ZONE J-4')

DATE: 9-30-70

REVISIONS

W100500.00

W100200.00

W99900.00

Temporary exp. jt. already grouted

2-#9 x 20'-0" @ 4" ea. side of col.

Det. 2
8-JK8-4.11
Sect. D-D
8-JK8-4

"Gap" thru wall & slab shall not be poured until after closing of adjacent exp. jts.

8-JK8-58.5

Pour #2

Pour #3

Pour #1

Temp. exp. jt.

Temp exp jt

6'-8"

8-JK5-14.1

8-JK5-6

Shorings along the shaded area shall not be removed until after completion of the temporary opening

Hatched area already constructed (typical)

Shorings under the entire Pour Area #1 & the adjacent temporary supports as shown, shall not be removed until after completion of the temporary opening.

Temporary opng. (to be poured only after closing of all adjacent temporary exp. jts.)

10" wall (Top @ El. 296'-0")

2-#9 x 20'-0" @ 4" ea. side of col.

Notes:

1. Number of reinforcing bars shown in ▭ has to be increased according to detail shown on 8-JK5-14.1
2. See SCJ-82 for other information not shown on this dwg.
3. See also 8-JK8-58.4

LICENSED PROFESSIONAL ENGINEER — LESLIE E. ROBERTSON — No. 34360 — UNIVERSITY OF THE STATE OF NEW YORK

DESIGNED

DRAWN: S.C.

REVIEWED: E.L.

8-JK8-58.3

SKILLING, HELLE, CHRISTIANSEN, ROBERTSON — Structural & Civil Engineers

PROJECT: THE WORLD TRADE CENTER

TITLE: LIVE LOAD RESTRICTION AT EL. 310 (ZONE J-4) DUE TO THE HANGING OF FORMWORK FROM FLOORS BELOW

DATE: 9-30-70

REVISIONS

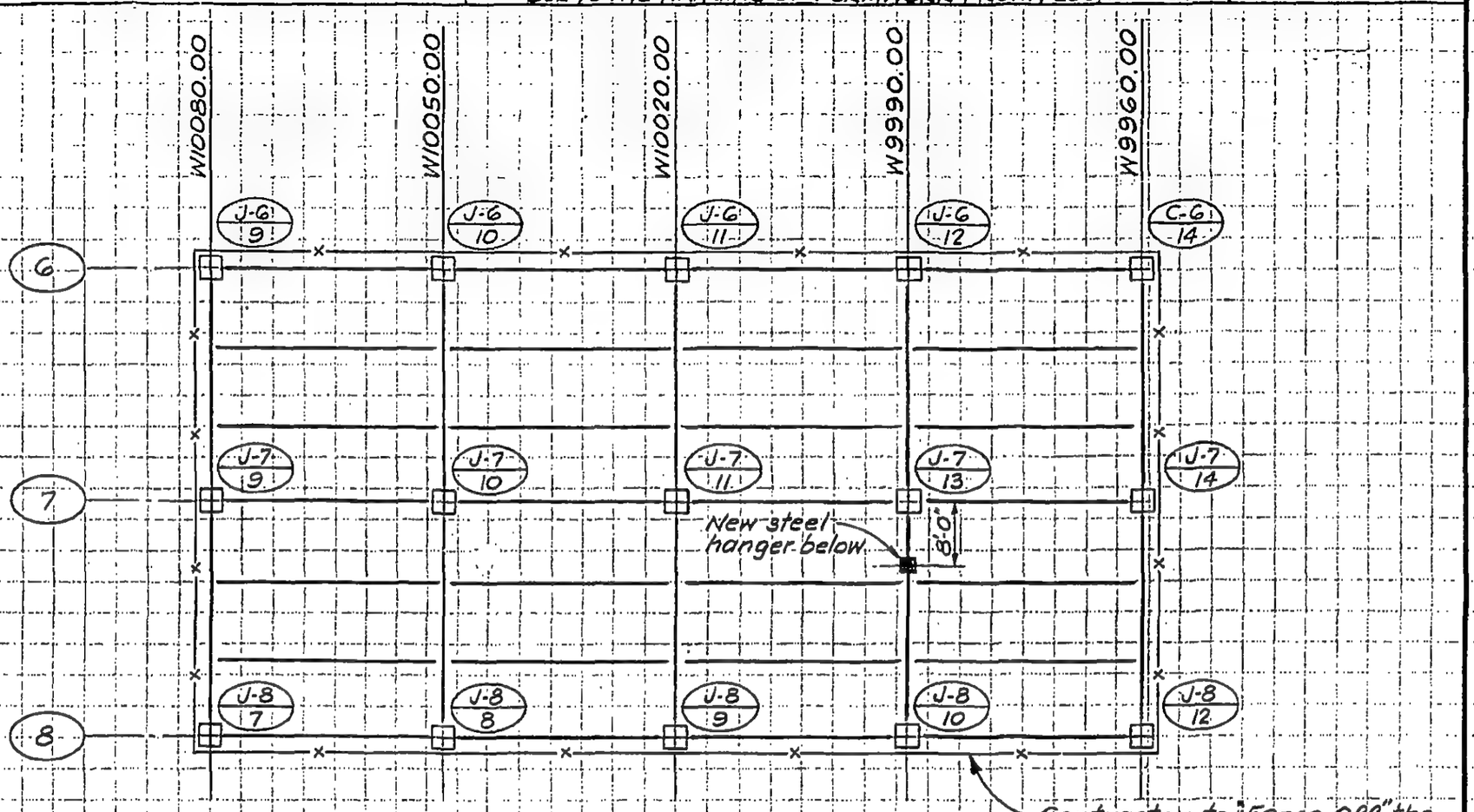

Part Plan at El. 310

Contractor to "Fence-Off" the entire area as shown to restrict any live load into this area. This restriction shall not be lifted until after removal of all formwork hanger-rods and the steel hanger below. Contractor to submit formwork "hanger-rod" details for approval.

LICENSED PROFESSIONAL ENGINEER — LESLIE E. ROBERTSON — No. 34360 — UNIVERSITY OF THE STATE OF NEW YORK

DESIGNED

DRAWN: S.C.

REVIEWED: E.L.

8-JK8-58.4

SKILLING, HELLE, CHRISTIANSEN, ROBERTSON — Structural & Civil Engineers

PROJECT: THE WORLD TRADE CENTER | TITLE: DETAILS | DATE: 9-30-70

REVISIONS

J-7 / 13

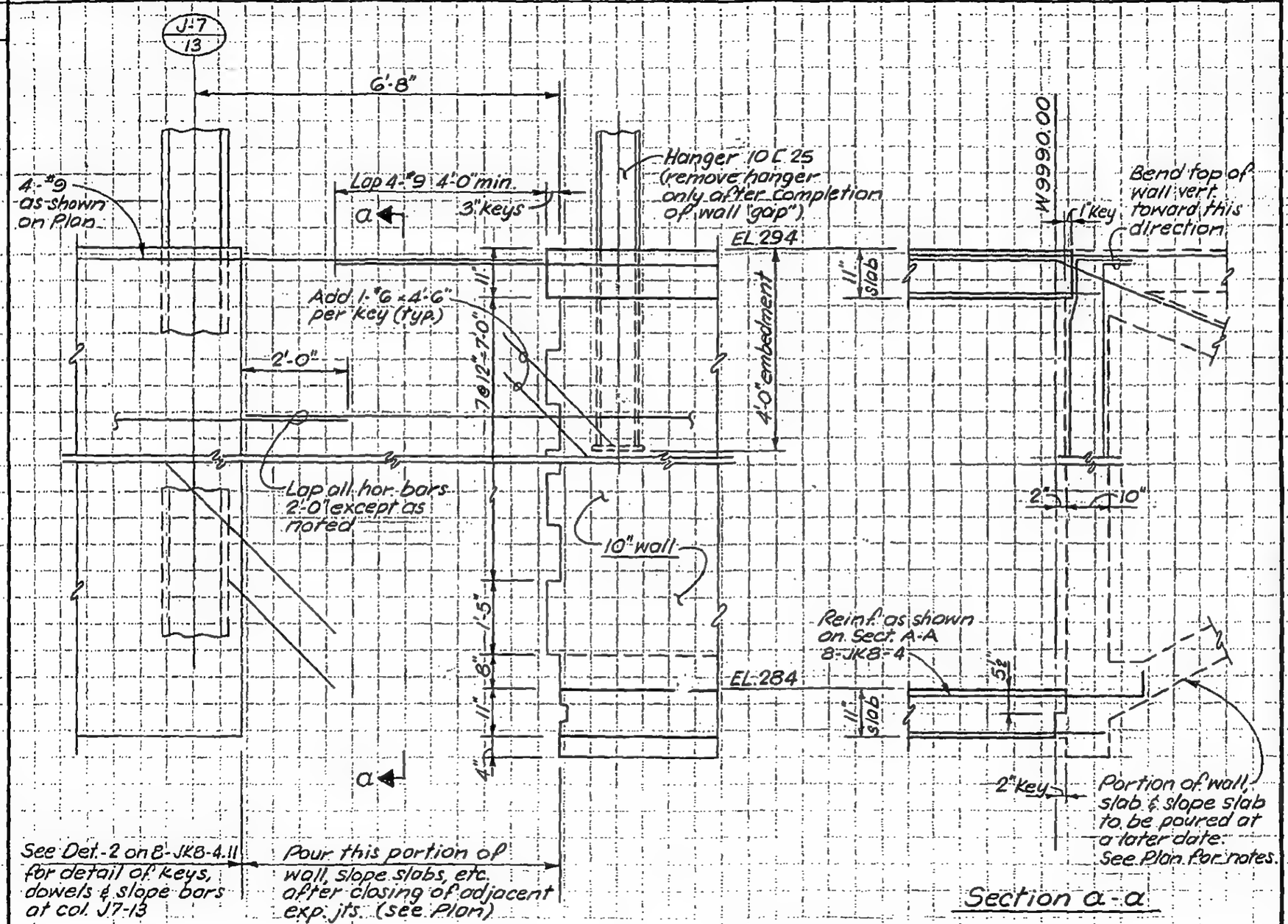

Section a-a

LICENSED PROFESSIONAL ENGINEER — LESLIE E. ROBERTSON — No. 34360 — UNIVERSITY OF THE STATE OF NEW YORK

DESIGNED

DRAWN S.C.

REVIEWED

8-JK8-58.5

SKILLING, HELLE, CHRISTIANSEN, ROBERTSON — Structural & Civil Engineers

PROJECT: THE WORLD TRADE CENTER | TITLE: SECTIONS AT EL. 310 - ZONE K-5 | DATE: 1-15-71

REVISIONS

6-15-73

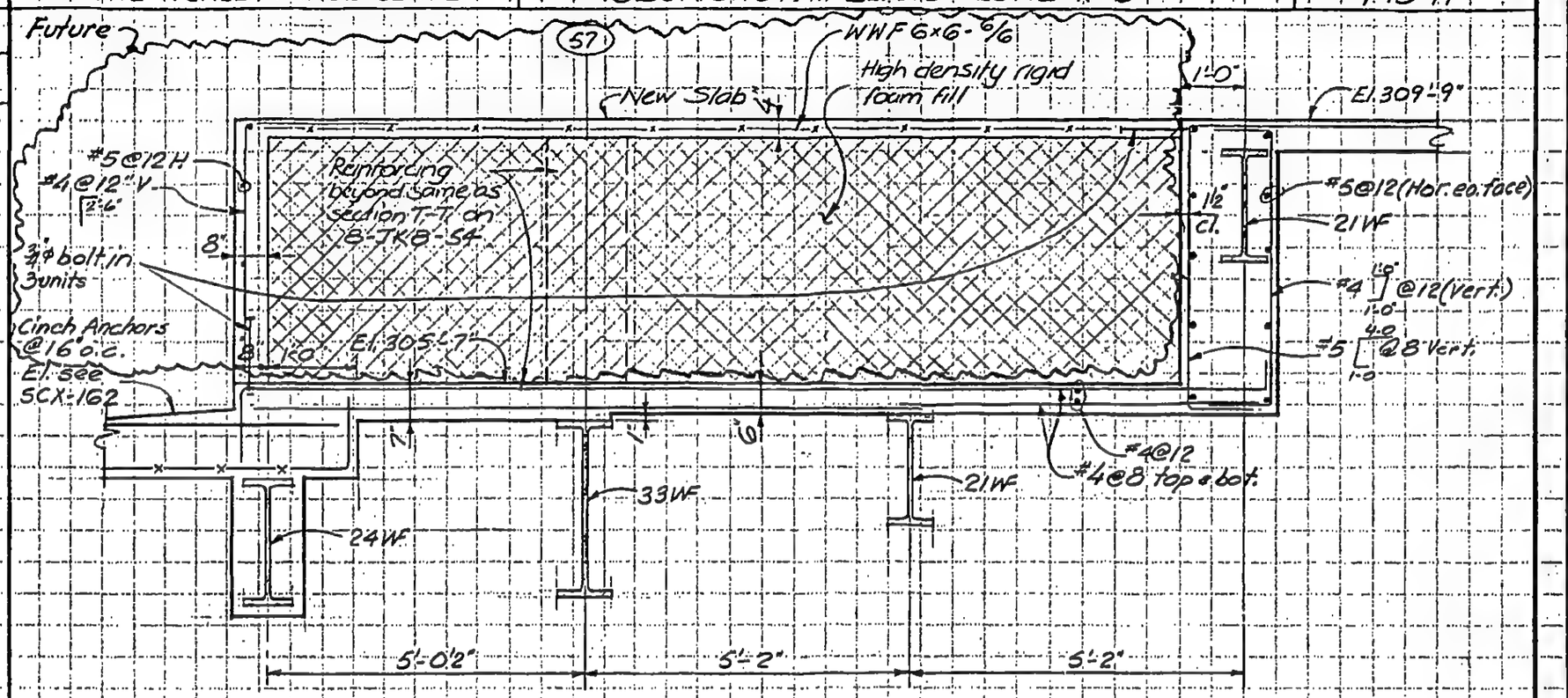

Section A-A

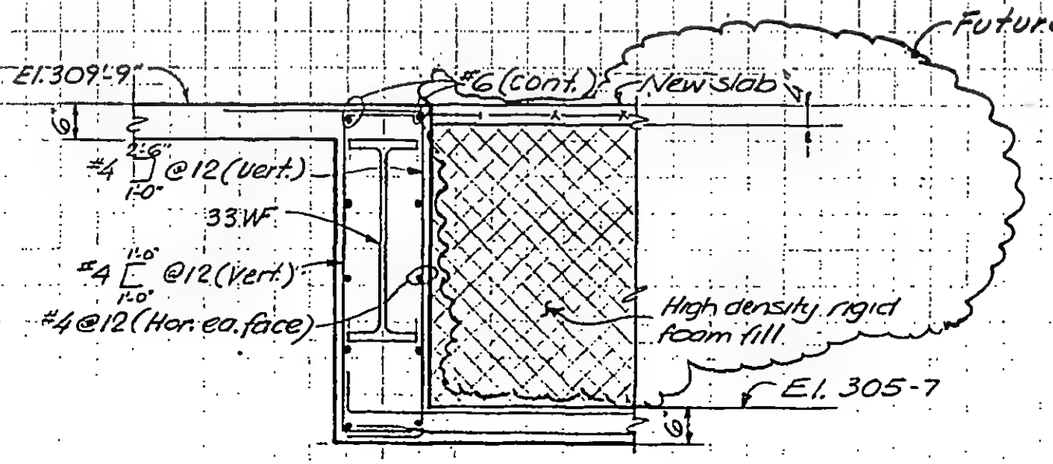

LICENSED PROFESSIONAL ENGINEER
LESLIE E. ROBERTSON
No 34380
UNIVERSITY OF THE STATE OF NEW YORK

DESIGNED
K. CHIANG

SKILLING, HELLE, CHRISTIANSEN, ROBERTSON — Structural & Civil Engineers

PROJECT: THE WORLD TRADE CENTER | TITLE: SECTIONS AT EL 310 - ZONE K-5 | DATE: 1-15-71

REVISIONS

6-15-73

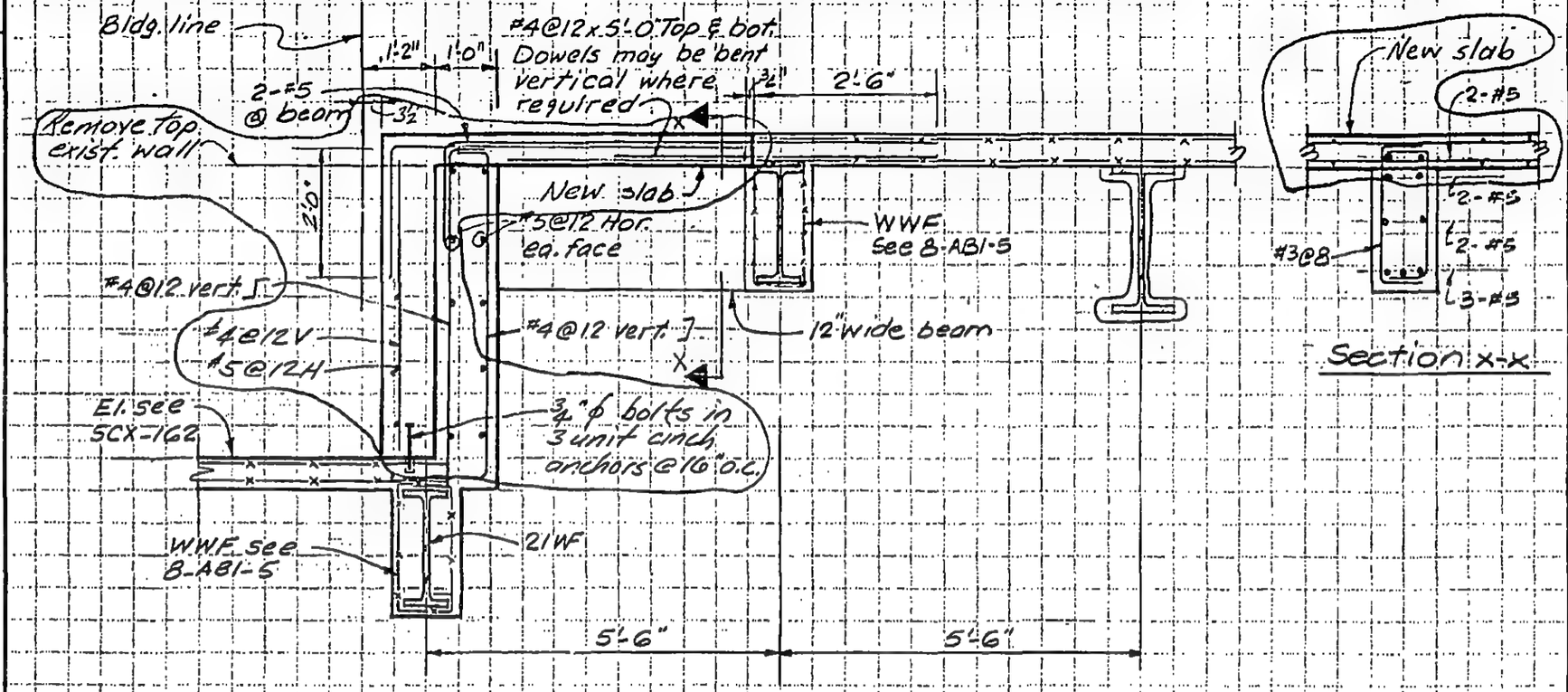

Section C-C

Section X-X

LICENSED PROFESSIONAL ENGINEER — LESLIE E. ROBERTSON — No. 34360 — UNIVERSITY OF THE STATE OF NEW YORK

DESIGNED K. CHIANG

DRAWN A. FRANQUI

REVIEWED WAB

8-JK8-59.2

SKILLING, HELLE, CHRISTIANSEN, ROBERTSON — Structural & Civil Engineers

PROJECT: THE WORLD TRADE CENTER | TITLE: SECTIONS AT EL. 310 – ZONE K-3, K-5 | DATE: 1-15-71

REVISIONS
9-20-71
6-15-73

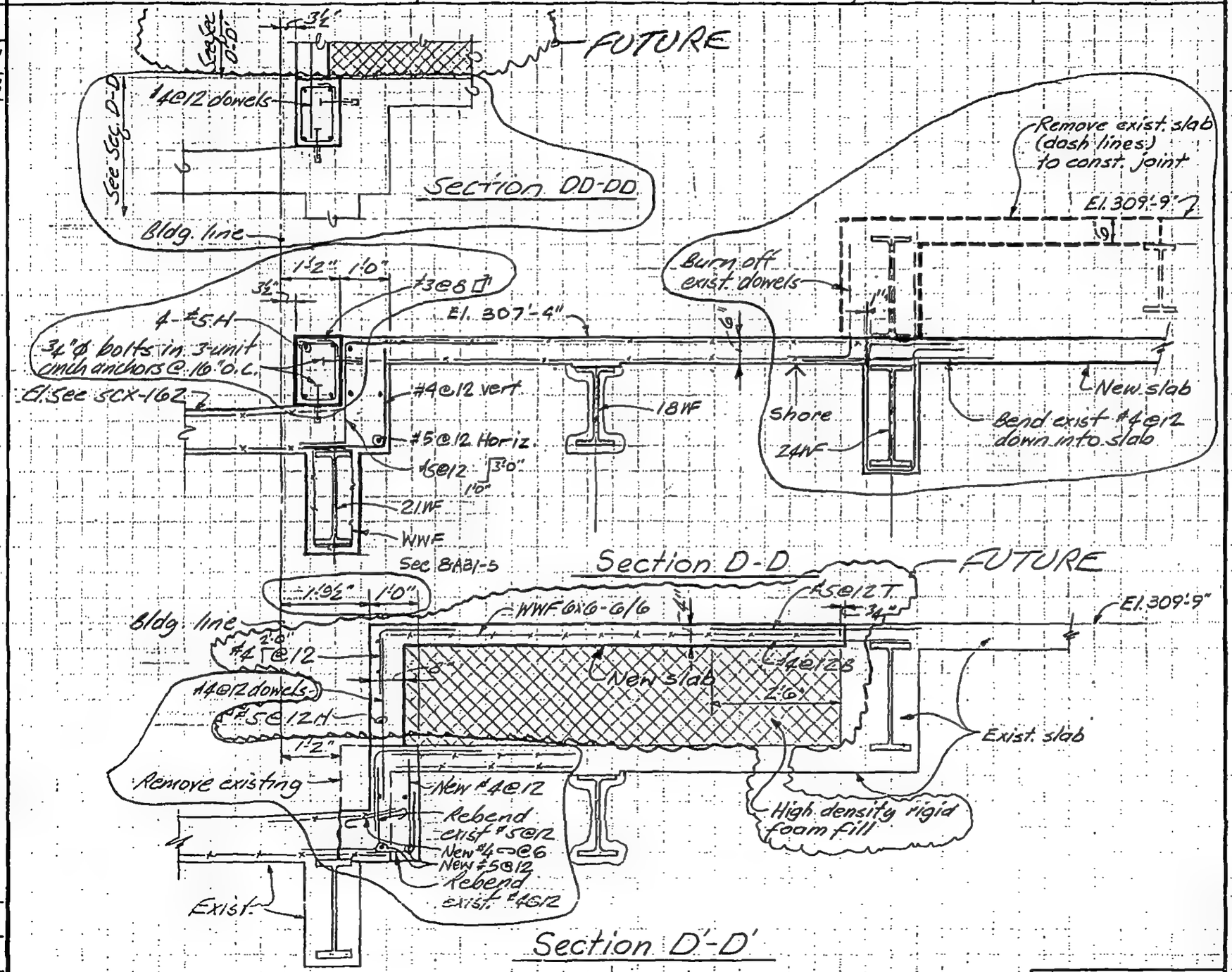

LICENSED PROFESSIONAL ENGINEER — LESLIE E. ROBERTSON — No. 34360 — UNIVERSITY OF THE STATE OF NEW YORK

DESIGNED: K. CHIANG
DRAWN: A. FRANQUI
REVIEWED: WOB

8-JKB-59.3

SKILLING, HELLE, CHRISTIANSEN, ROBERTSON — Structural & Civil Engineers

PROJECT: THE WORLD TRADE CENTER | TITLE: SECTIONS AT EL. 310 – ZONE K-5 | DATE: 1-15-71

REVISIONS
9-15-71
6-15-73

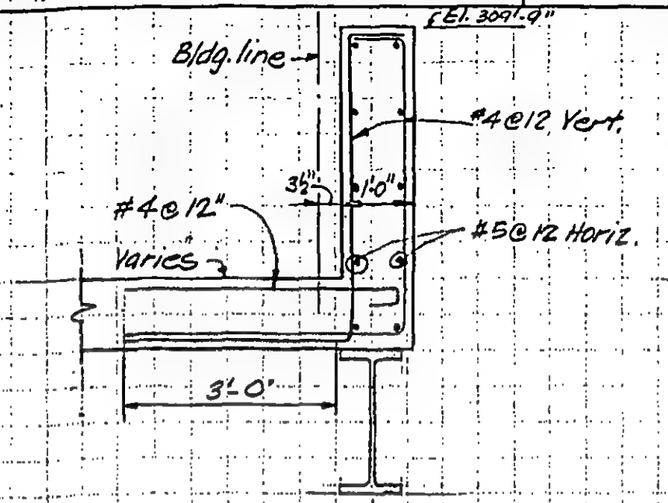

Section E-E

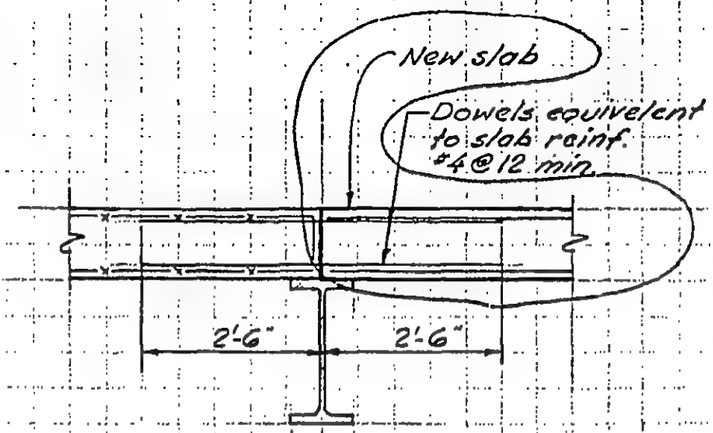

Section F-F

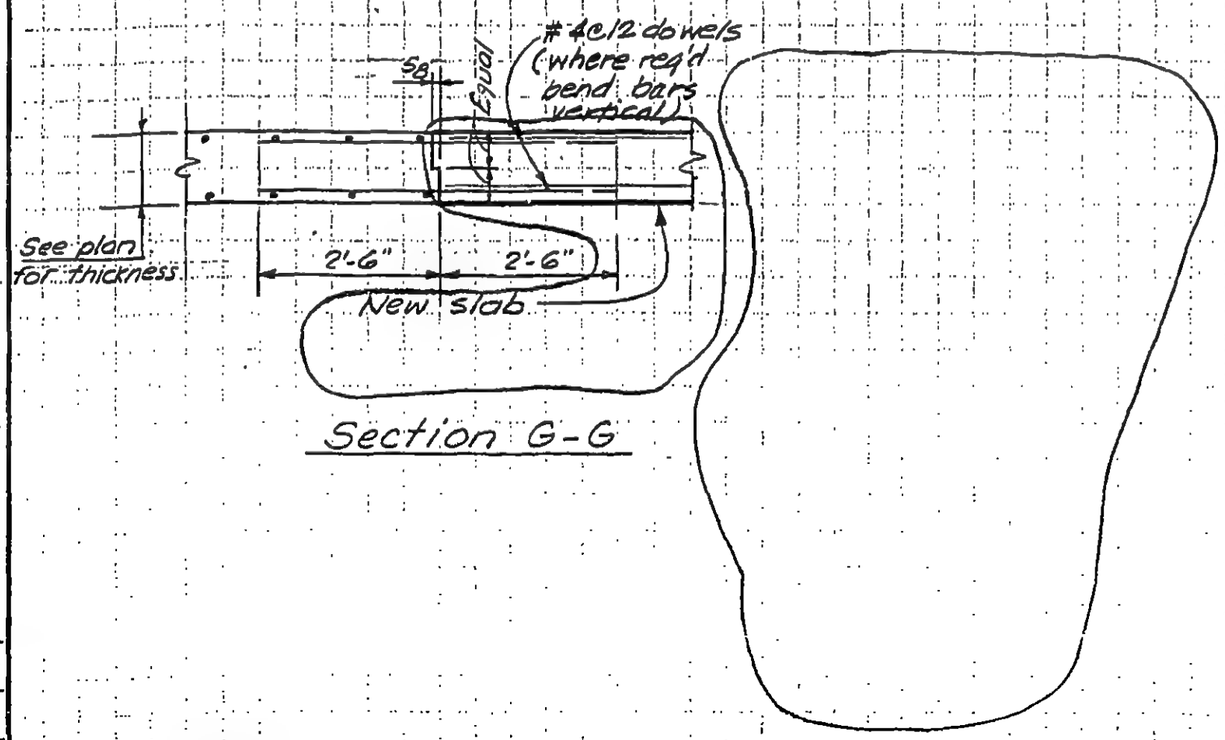

Section G-G

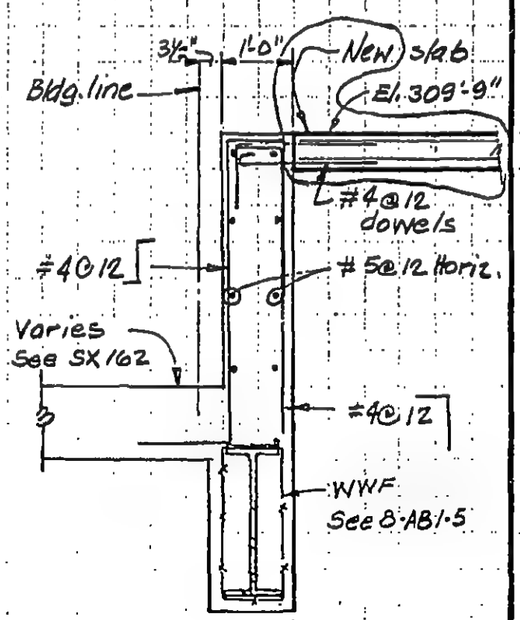

Section K-K

LICENSED PROFESSIONAL ENGINEER — LESLIE E. ROBERTSON — No. 34360 — UNIVERSITY OF THE STATE OF NEW YORK

DESIGNED K. CHIANG
DRAWN A. FRANQUI
REVIEWED Wab

8-JK8-59.4

SKILLING, HELLE, CHRISTIANSEN, ROBERTSON — Structural & Civil Engineers

PROJECT: THE WORLD TRADE CENTER | TITLE: SECTIONS EL 310 | DATE: 9-15-71

REVISIONS
9-20-71
3-10-72
6-15-73

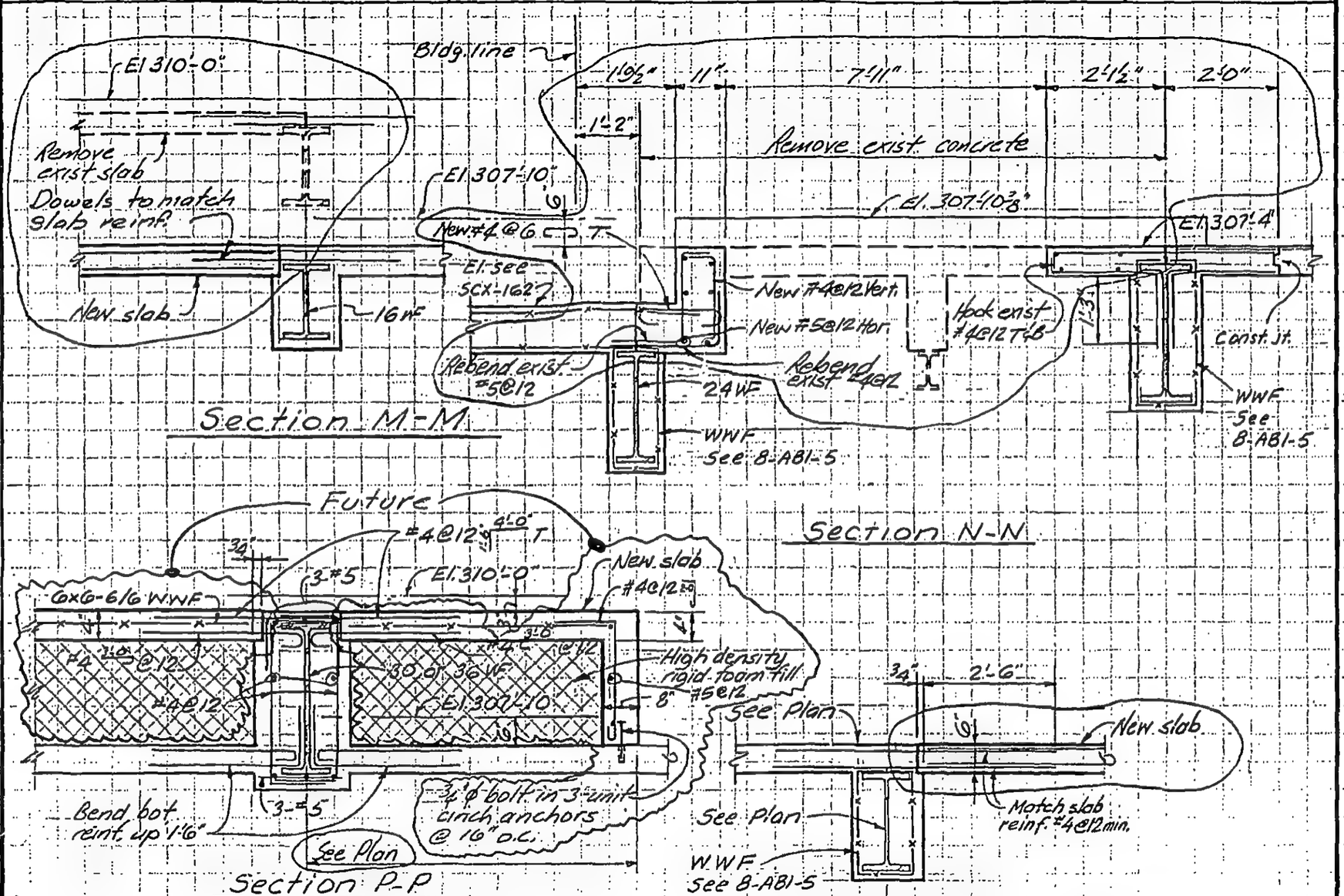

LICENSED PROFESSIONAL ENGINEER — LESLIE E. ROBERTSON — No. 34960 — UNIVERSITY OF THE STATE OF NEW YORK

DESIGNED

DRAWN J.G.

REVIEWED LEAB

8-JK8-59.5

SKILLING, HELLE, CHRISTIANSEN, ROBERTSON — Structural & Civil Engineers

PROJECT THE WORLD TRADE CENTER | TITLE SECTIONS EL 310 | DATE 9-20-71

REVISIONS

6-15-73

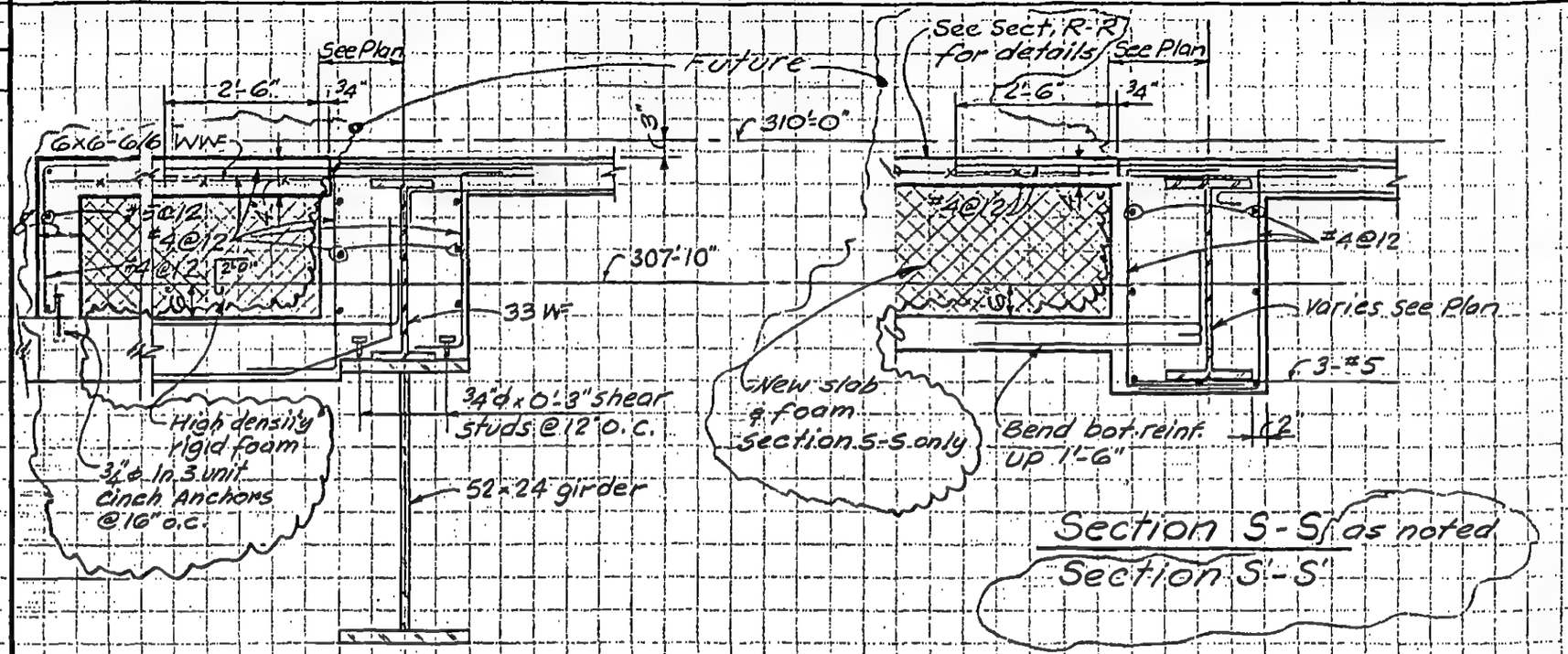

Section R-R

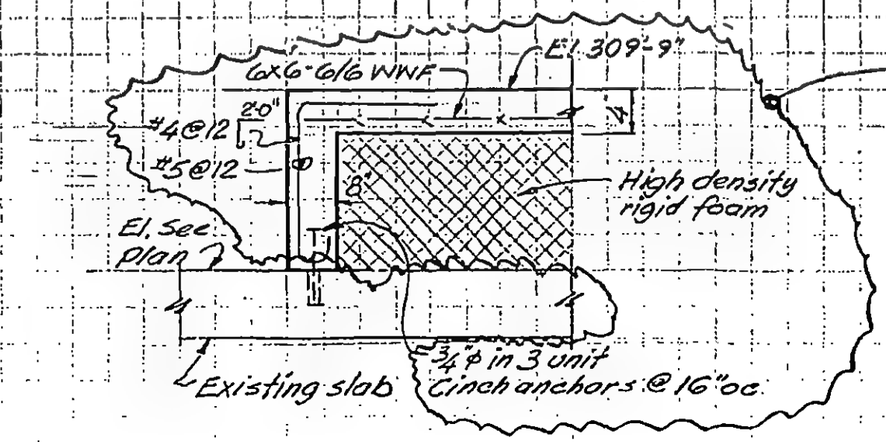

Section RR-RR

LICENSED PROFESSIONAL ENGINEER
LESLIE E. ROBERTSON
No. 34360
UNIVERSITY OF THE STATE OF NEW YORK

DESIGNED

SKILLING, HELLE, CHRISTIANSEN, ROBERTSON — Structural & Civil Engineers

PROJECT: THE WORLD TRADE CENTER | TITLE: SECTIONS - EL. 310 - ZONE K3 | DATE: 3-10-72

REVISIONS

6-15-73

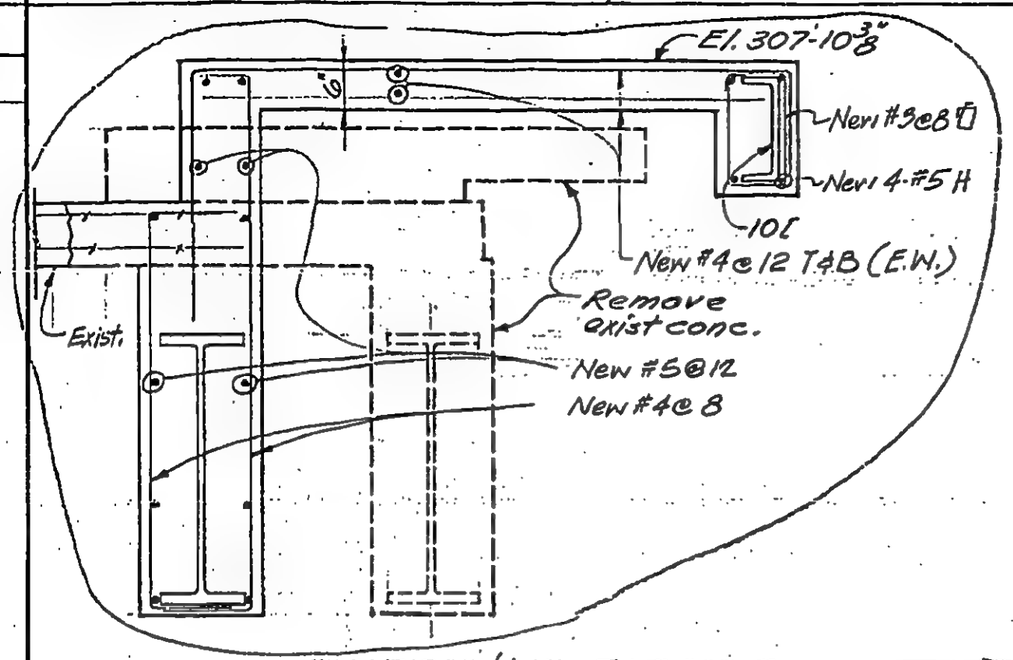

Section T-T

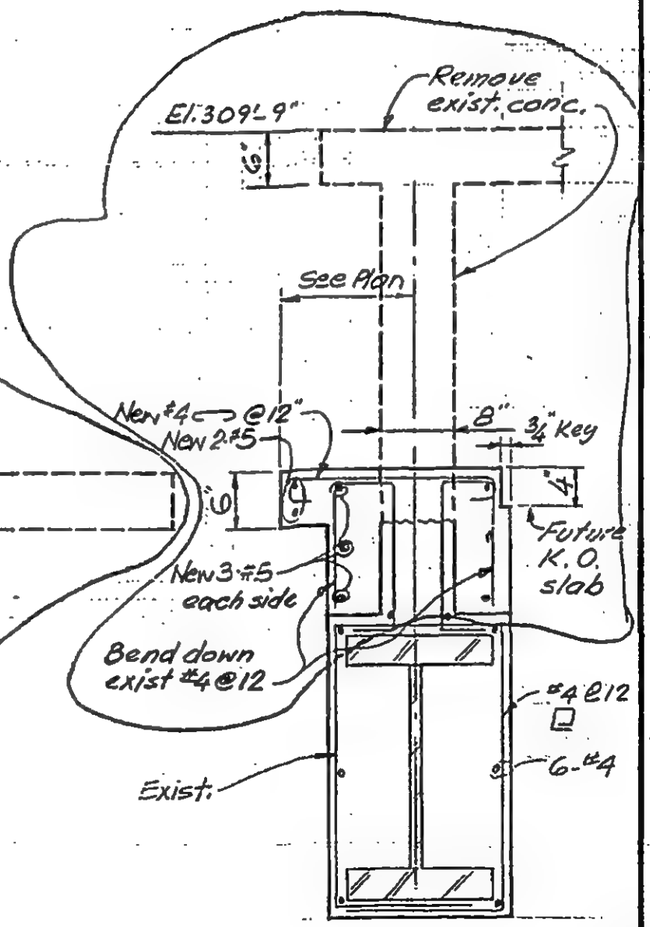

Section W-W

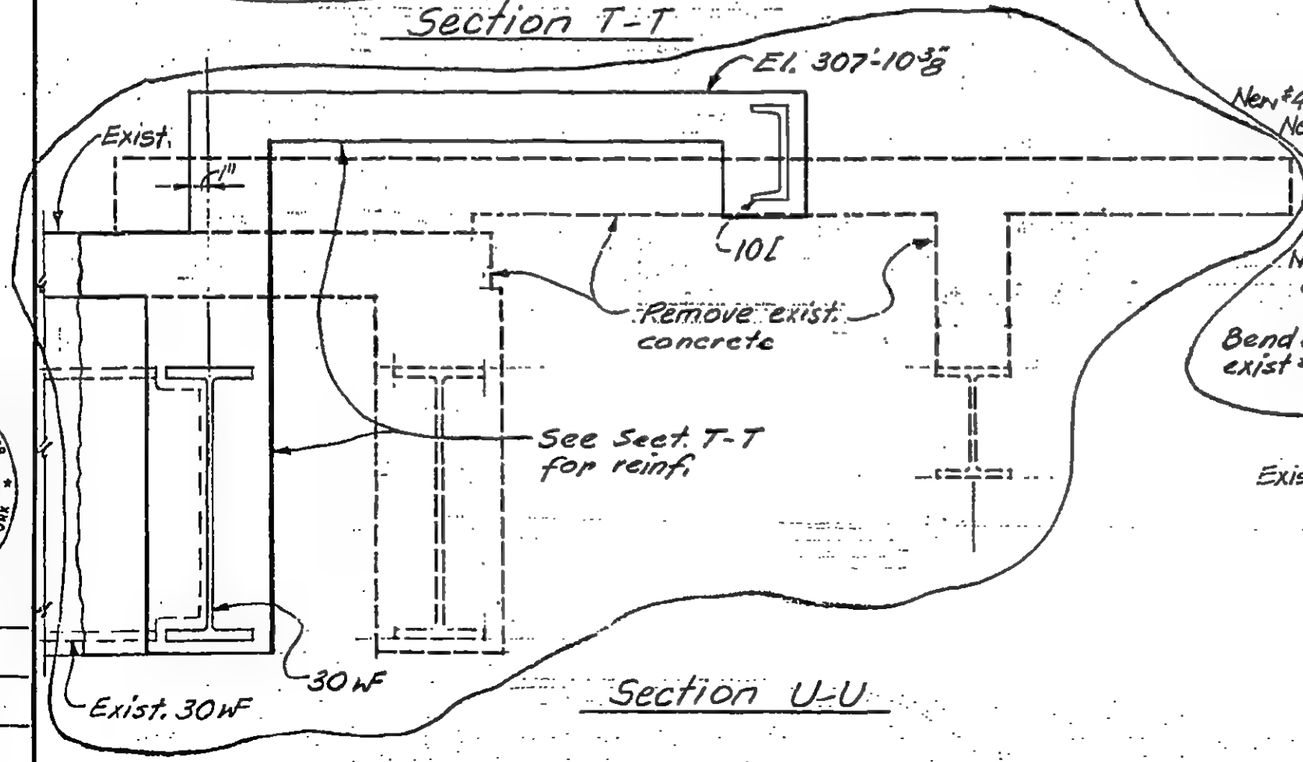

Section U-U

LICENSED PROFESSIONAL ENGINEER
LESLIE E. ROBERTSON
No 34360
UNIVERSITY OF THE STATE OF NEW YORK

DESIGNED K. Chiang

DRAWN A. Franqui

REVIEWED

8-JKB-59.7

SKILLING, HELLE, CHRISTIANSEN, ROBERTSON — Structural & Civil Engineers

PROJECT: THE WORLD TRADE CENTER | TITLE: DUMBWAITER SHAFT | DATE: 2-17-71

REVISIONS

K-74/19

7'-3" ± (See Arch. Dwg.)

5'-8 1/8"

90°

8" wall

3'-3"

3'-11

3'-9"

8"

3'-3 1/4" (M.O.)

6'-0"

10 3/8"

6'-9 1/2"

W9751'-10"

N4569'-1"

Tower 'B' column ref. line

Col. 259

PLAN AT EL. 264'
(1/4"=1'-0")

Top of pit at El. 249'

8" wall

3'-11

3'-9"

8"

3'-7 1/4" (M.O.)

6'-0"

8 3/8"

6'-9 1/2"

W9751'-10"

N4569'-1"

Tower 'B' column ref. line

Col. 259.

PLAN AT EL. 250'
(1/4"=1'-0")

Bent wall vert. into 4" slab-Top (Typ. on all sides)

1'-6"

4" slab

#4@8 ea. way

El. 273'-7"

8I - See Dumbwaiter Shop Dwgs.

8" wall

Varies

4'-5"

8" wall

Provide 8WF13 (A-36) with bearing PL at ea. end as shown on Detail 'A'

Provide pockets to receive steel beams. See Detail 'A'

9'-7"

Exist. floor opng.

4'-4 1/4" M.O.

El. 264'

15" slab

5/8" ϕ x 1'-6" with 3 unit threaded ring wedge cinch anchors at 1'-6" O.C. (Typ. all sides as shown.)

8" wall

3'-11

8" wall

Exist. slab

Added reinf. & corner bars at opngs. See 8-1K6-2.2 (Typ.)

5'-10 1/4" M.O.

Bent exist. bars into wall (Typ. all sides)

#4 L@12 (Typ. all sides)

El. 250'

El. 249'

6" slab

Exist. slab

#4 T@8 ea. way

Cut exist. slab (Properly shored on all sides until wall below El. 250' is constructed

Solid rock

3'-2"

#4@8 ea. way

Section O-O

Slab shall not be poured until after mach. installation.

4"

1"

8I

Provide: PL 5"x2'-0"x6" (A-36) to receive 8I

#5 ϕ A.B

Detail 'A'
(No scale)

Notes:

1. See Dumbwaiter Shop Dwgs. for size & location of wall opngs. not shown.
2. See 8-1K6-2.2 for typical wall reinforcements.

LICENSED PROFESSIONAL ENGINEER — LESLIE E. ROBERTSON — No. 34360 — UNIVERSITY OF THE STATE OF NEW YORK

DESIGNED: E. LIU

DRAWN: A. FRANQUI

REVIEWED:

8-1K8-60

SKILLING, HELLE, CHRISTIANSEN, ROBERTSON — Structural & Civil Engineers

PROJECT: THE WORLD TRADE CENTER | TITLE: SECTIONS - ELEVATION 320 | DATE: 1-15-72

REVISIONS

10/10/72

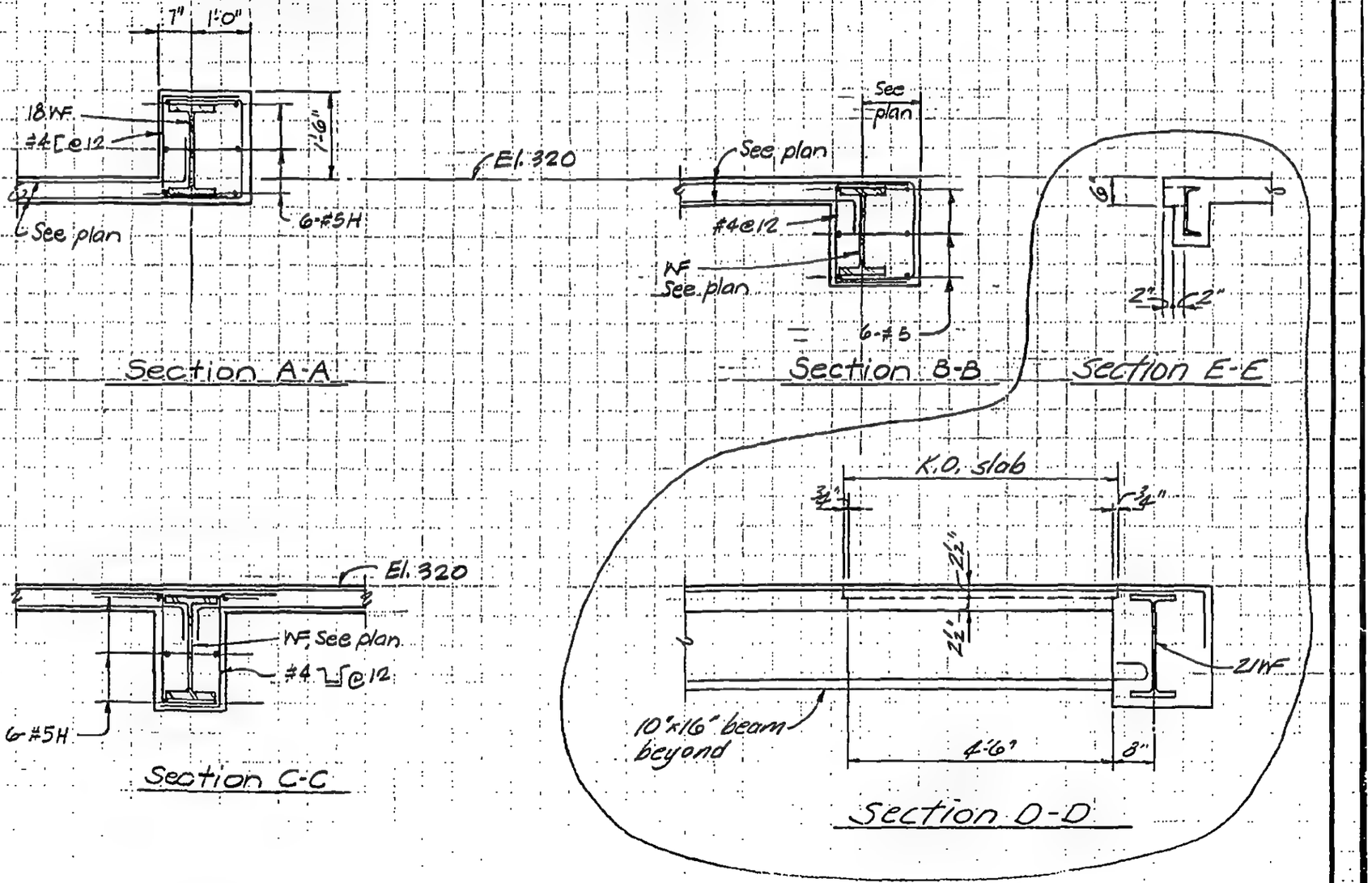

LICENSED PROFESSIONAL ENGINEER — LESLIE E. ROBERTSON — No. 34360 — UNIVERSITY OF THE STATE OF NEW YORK

DESIGNED

DRAWN: PM Orelli

REVIEWED: W. Brewer

8-JKB-61

SKILLING, HELLE, CHRISTIANSEN, ROBERTSON — Structural & Civil Engineers

PROJECT: THE WORLD TRADE CENTER | TITLE: SECTIONS-PARKING ELEVATOR-ZONE K3-EL.294 | DATE: 12-28-71

REVISIONS

1-15-72 Gen. Rev.

3-10-72 Gen. Rev.

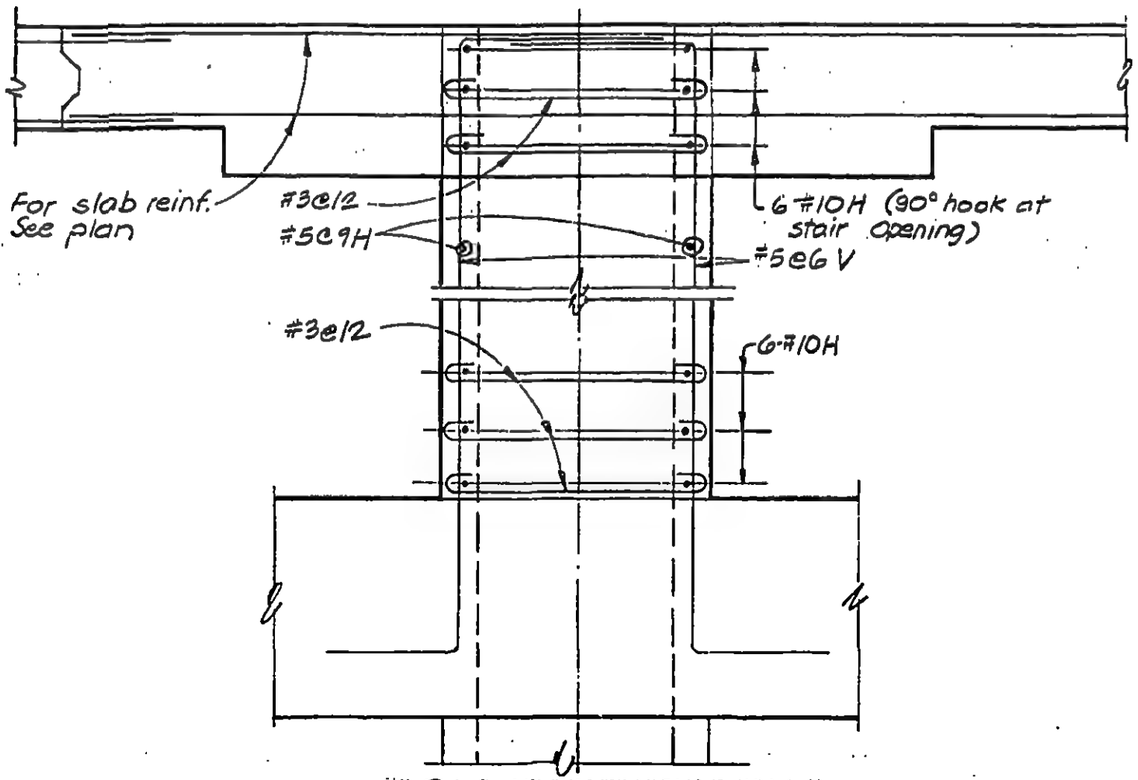

Section A-A

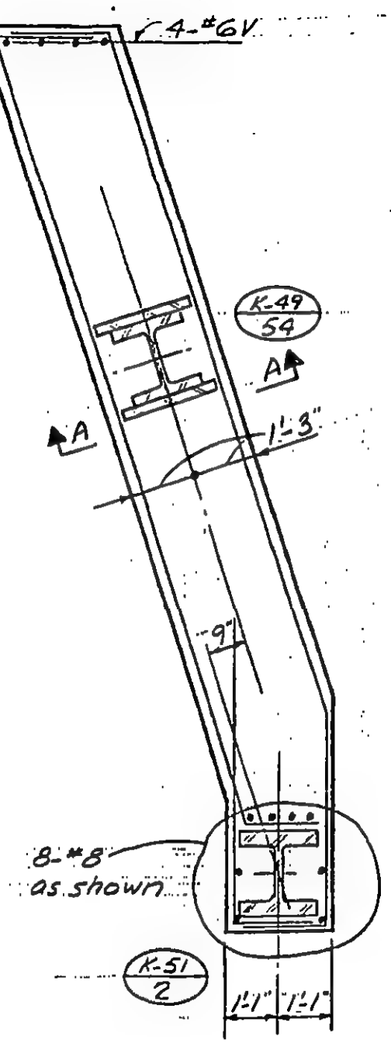

Detail A

LICENSED PROFESSIONAL ENGINEER
LESLIE E. ROBERTSON
No. 34360
UNIVERSITY OF THE STATE OF NEW YORK

DESIGNED K. Chiang

DRAWN A. Franqui

REVIEWED W. Clp

8-JK8-62.1

SKILLING, HELLE, CHRISTIANSEN, ROBERTSON — Structural & Civil Engineers

PROJECT: THE WORLD TRADE CENTER | TITLE: SECTIONS - PARKING ELEVATOR - ZONE K3 - EL. 284' | DATE: 1-15-72

REVISIONS

3-10-72 Complete Rev.

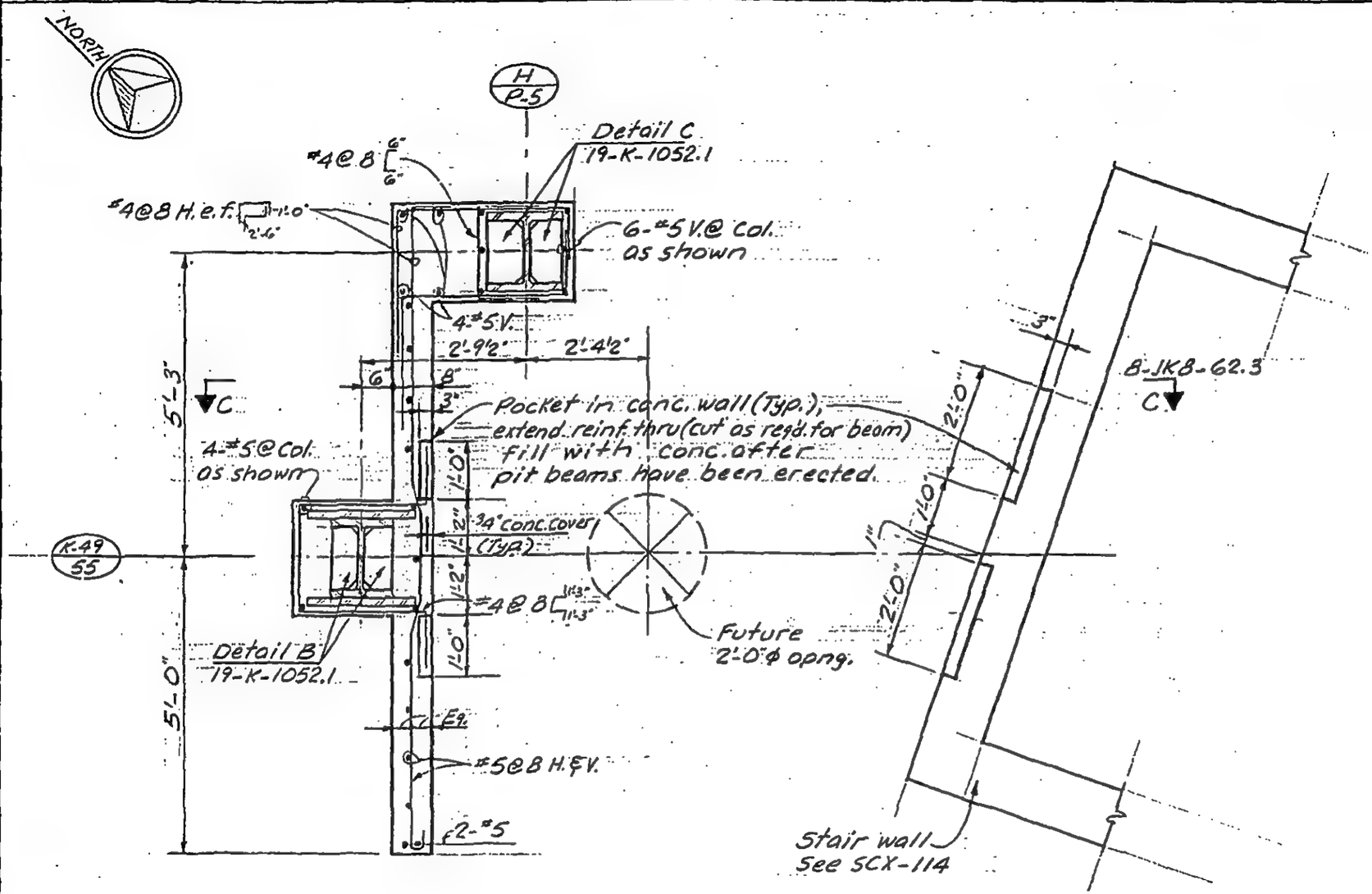

Detail B

LICENSED PROFESSIONAL ENGINEER — LESLIE E. ROBERTSON — NO 34360 — UNIVERSITY OF THE STATE OF NEW YORK

DESIGNED K. Chiang

DRAWN A. Franqui

REVIEWED LER

8-JK8-62.2

SKILLING, HELLE, CHRISTIANSEN, ROBERTSON — Structural & Civil Engineers

PROJECT: THE WORLD TRADE CENTER | TITLE: SECTIONS-PARKING ELEVATOR-ZONE K3-EL.294 | DATE: 1-15-72

REVISIONS

3-10-72 Complete Rev.

3-15-73

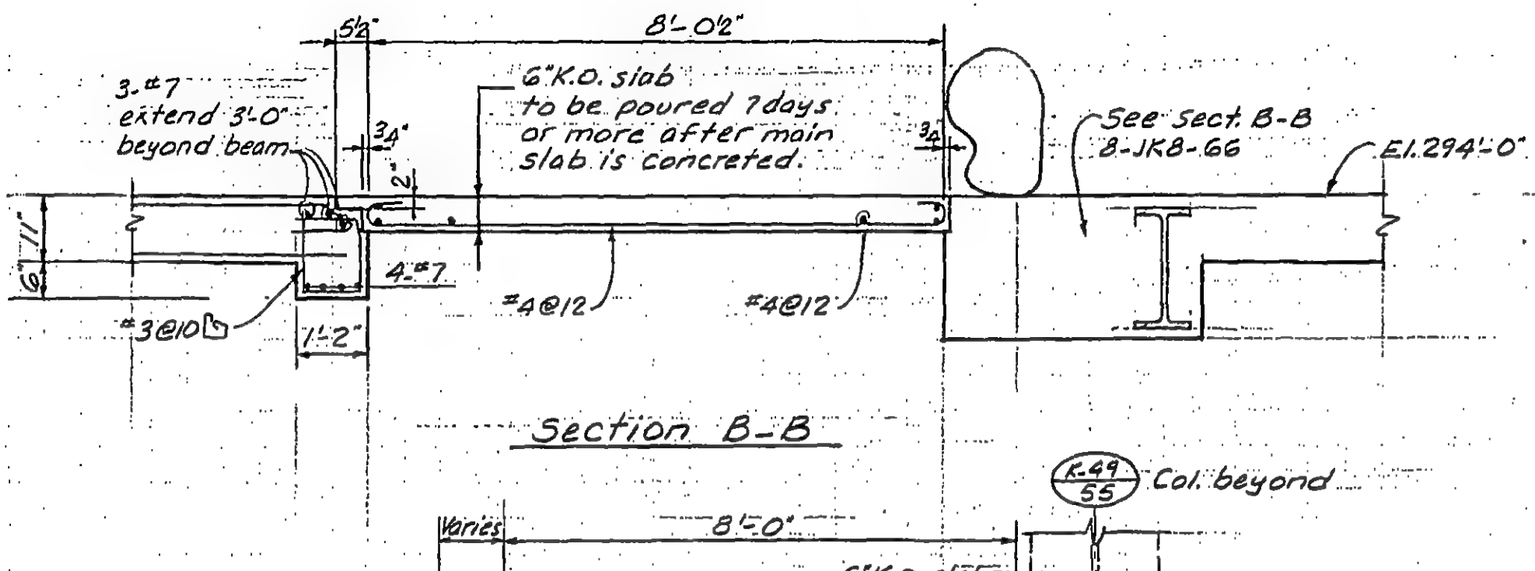
5½"
8'-0½"
3-#7 extend 3'-0" beyond beam
3/4"
2"
6"K.O. slab to be poured 7 days or more after main slab is concreted.
3/4"
See Sect. B-B 8-JK8-66
El.294'-0"
11"
6"
4-#7
#4@12
#4@12
#3@10
1'-2"

Section B-B

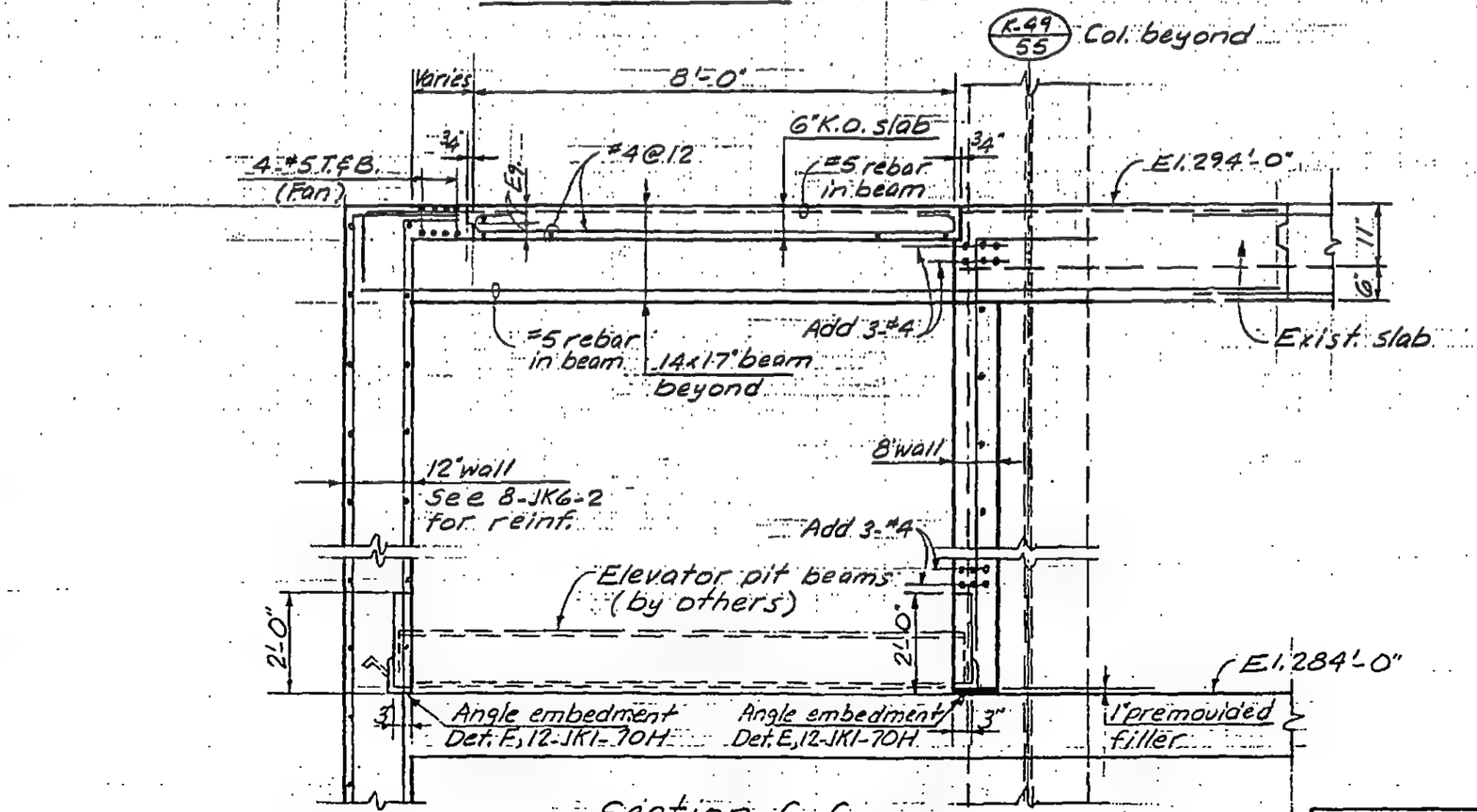

Section C-C

8-JK8-62.3

LICENSED PROFESSIONAL ENGINEER — LESLIE E. ROBERTSON — No. 34360 — UNIVERSITY OF THE STATE OF NEW YORK

DESIGNED K. Chiang

DRAWN A. Franqui

REVIEWED WAB

SKILLING, HELLE, CHRISTIANSEN, ROBERTSON — Structural & Civil Engineers

PROJECT: THE WORLD TRADE CENTER | TITLE: SECTIONS - PARKING ELEVATOR - ZONE K-3-EL.294 | DATE: 3-10-72

REVISIONS

3-15-73

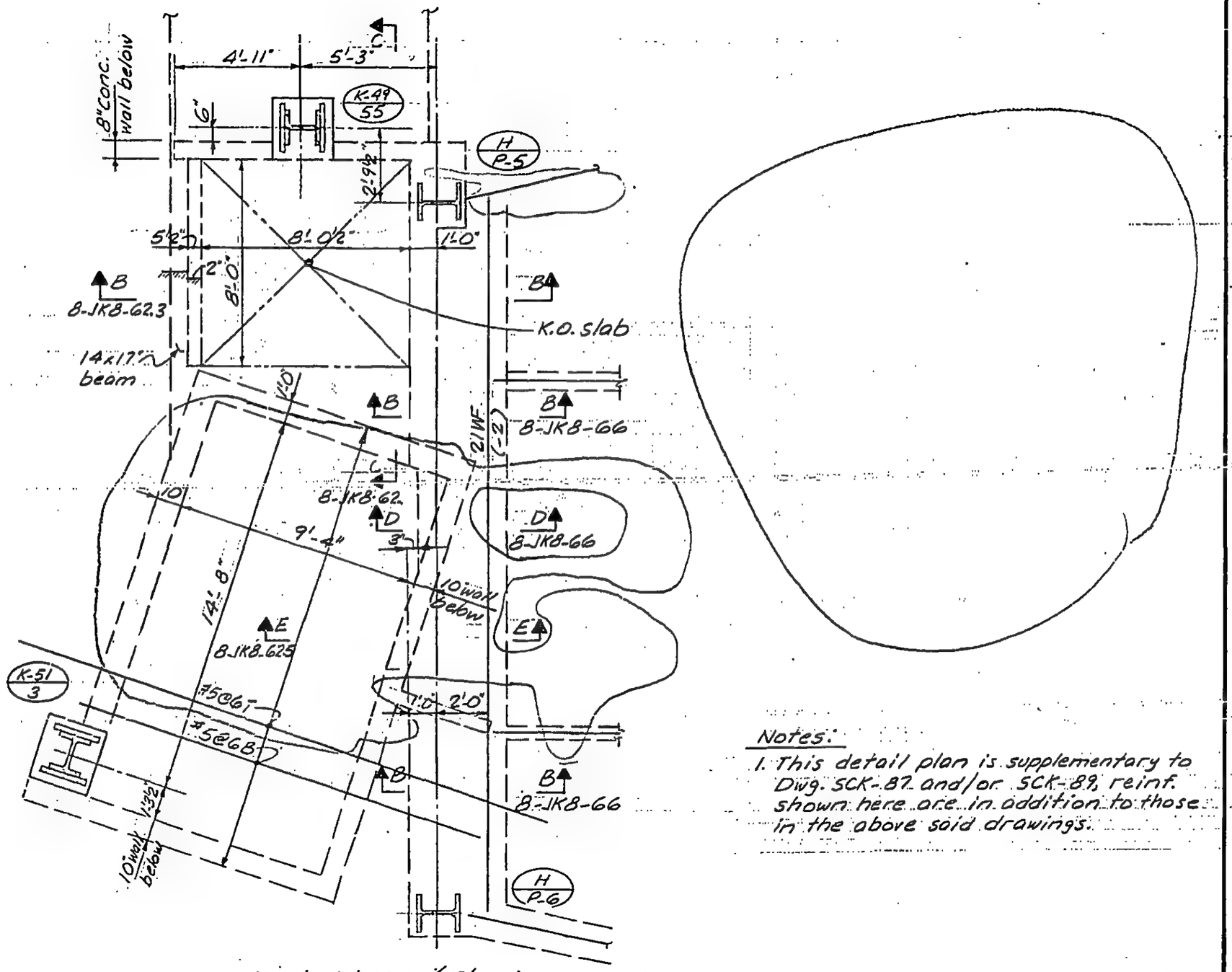

Detail C (Plan)

Notes:

1. This detail plan is supplementary to Dwg. SCK-87 and/or SCK-89, reinf. shown here are in addition to those in the above said drawings.

LICENSED PROFESSIONAL ENGINEER — LESLIE E. ROBERTSON — No 34360 — UNIVERSITY OF THE STATE OF NEW YORK

DESIGNED: K. Chiang

DRAWN: A. Franqui

REVIEWED: WAP

8-JK8-62.4

SKILLING, HELLE, CHRISTIANSEN, ROBERTSON — Structural & Civil Engineers

PROJECT: THE WORLD TRADE CENTER | TITLE: SECTIONS - PARKING ELEVATOR - ZONE K-3 - EL. 294 | DATE: 3-10-72

REVISIONS

3-15-73

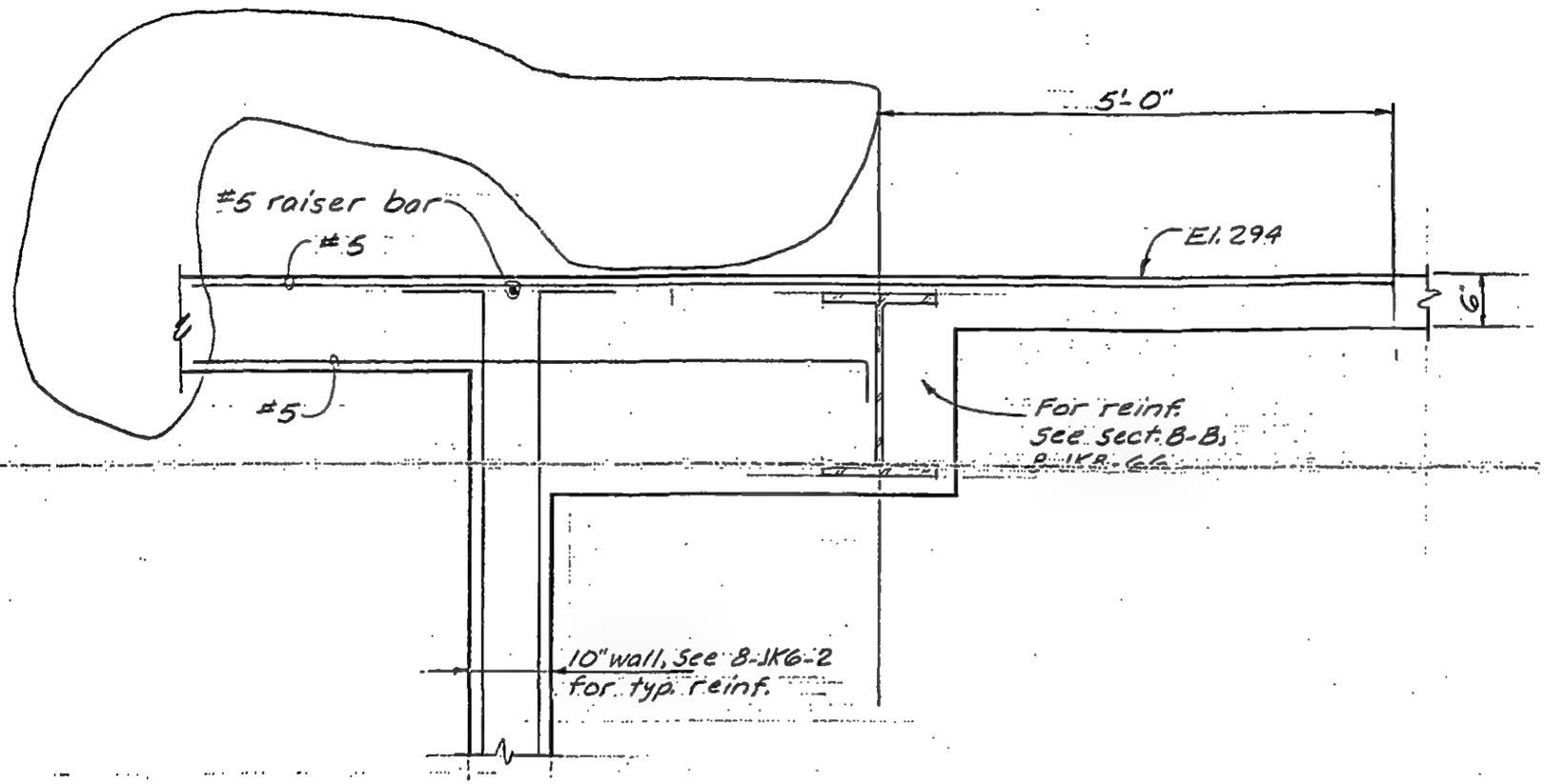

Section E-E

LICENSED PROFESSIONAL ENGINEER — LESLIE E. ROBERTSON — No 34360 — UNIVERSITY OF THE STATE OF NEW YORK

DESIGNED: K. Chiang

DRAWN: A. Franqui

REVIEWED: LER

8-JK8-62.5

SKILLING, HELLE, CHRISTIANSEN, ROBERTSON — Structural & Civil Engineers

PROJECT: THE WORLD TRADE CENTER | TITLE: SECTION AT STAIR K-3, EL. 294, ZONE K-3 | DATE: 3-9-73

REVISIONS

4/18/73

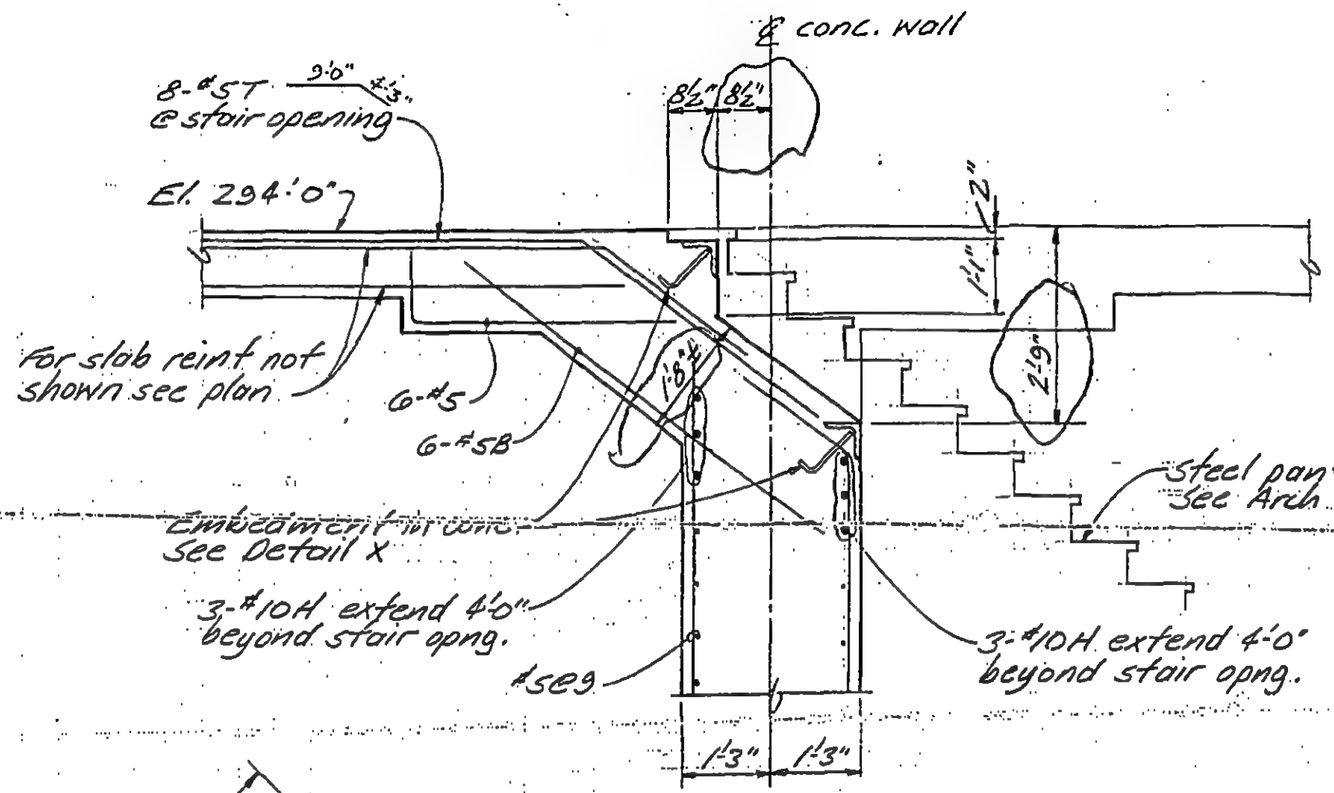

Section G-G

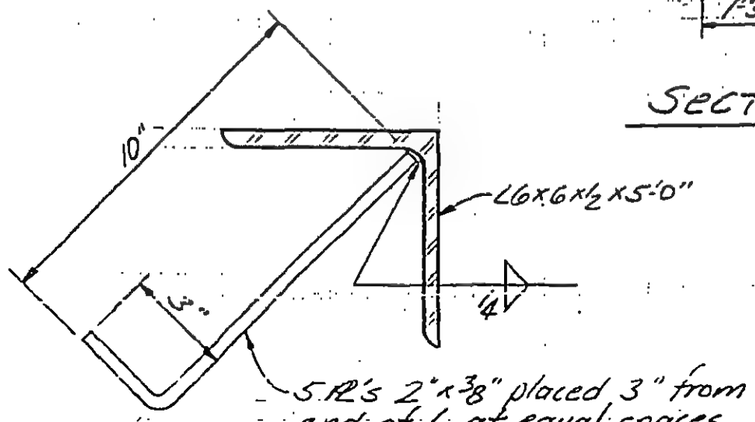

Detail X

LICENSED PROFESSIONAL ENGINEER — LESLIE E. ROBERTSON — No. 34360 — UNIVERSITY OF THE STATE OF NEW YORK

DESIGNED KC

DRAWN JA ALF

REVIEWED

8-JKB-62.6

SKILLING, HELLE, CHRISTIANSEN, ROBERTSON — Structural & Civil Engineers

PROJECT THE WORLD TRADE CENTER | TITLE TYPICAL PLACEMENT OF WALL & K.O. SLAB REINF. | DATE 12-17-71

REVISIONS

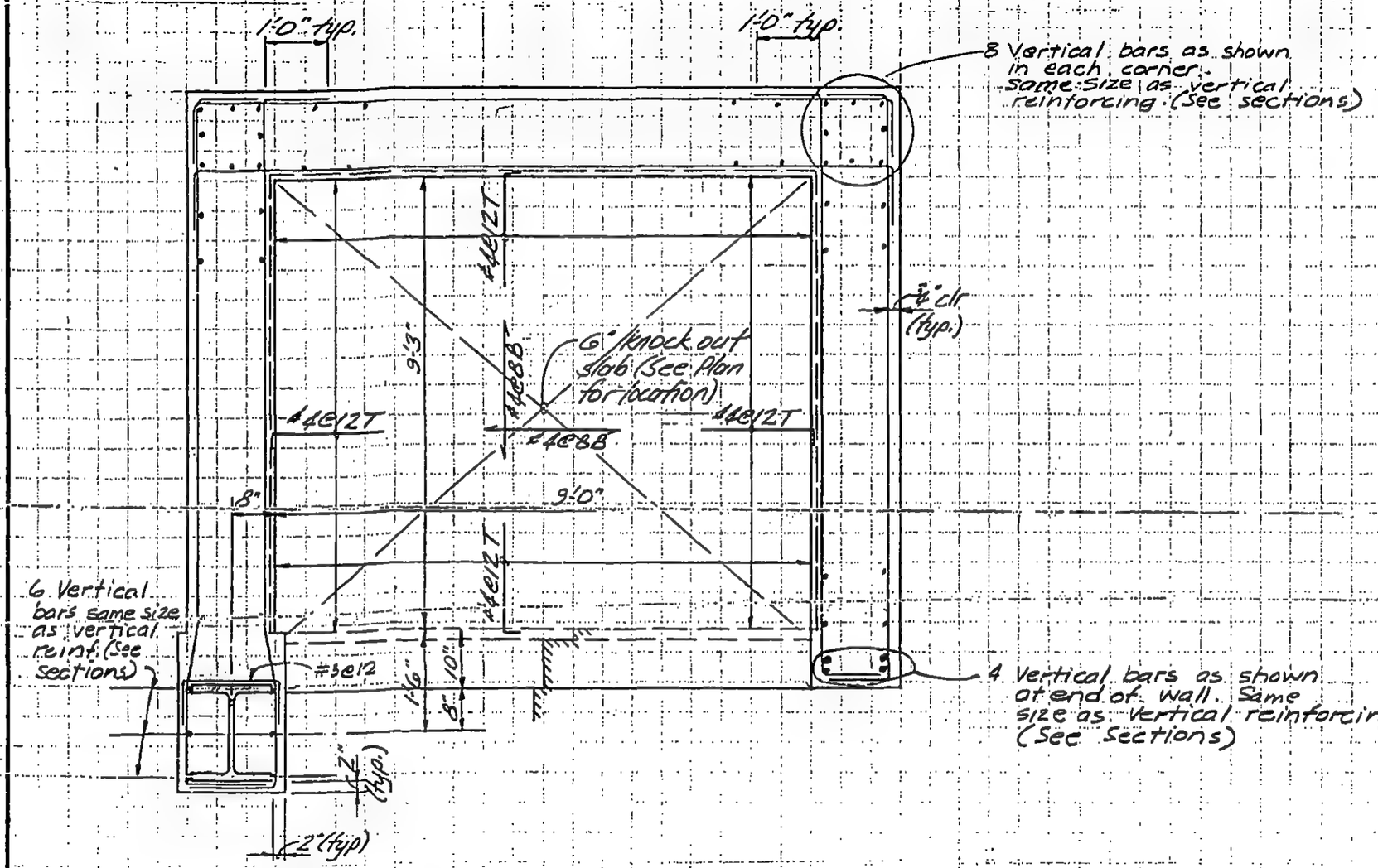

Detail A

LICENSED PROFESSIONAL ENGINEER — LESLIE E. ROBERTSON — NO. 34360 — UNIVERSITY OF THE STATE OF NEW YORK

DESIGNED

DRAWN

REVIEWED

8-JK8-63.1

SKILLING, HELLE, CHRISTIANSEN, ROBERTSON — Structural & Civil Engineers

PROJECT: THE WORLD TRADE CENTER | TITLE: SECTIONS AT HOTEL FREIGHT ELEVATOR WALLS | DATE: 12-17-71

REVISIONS
1-15-72

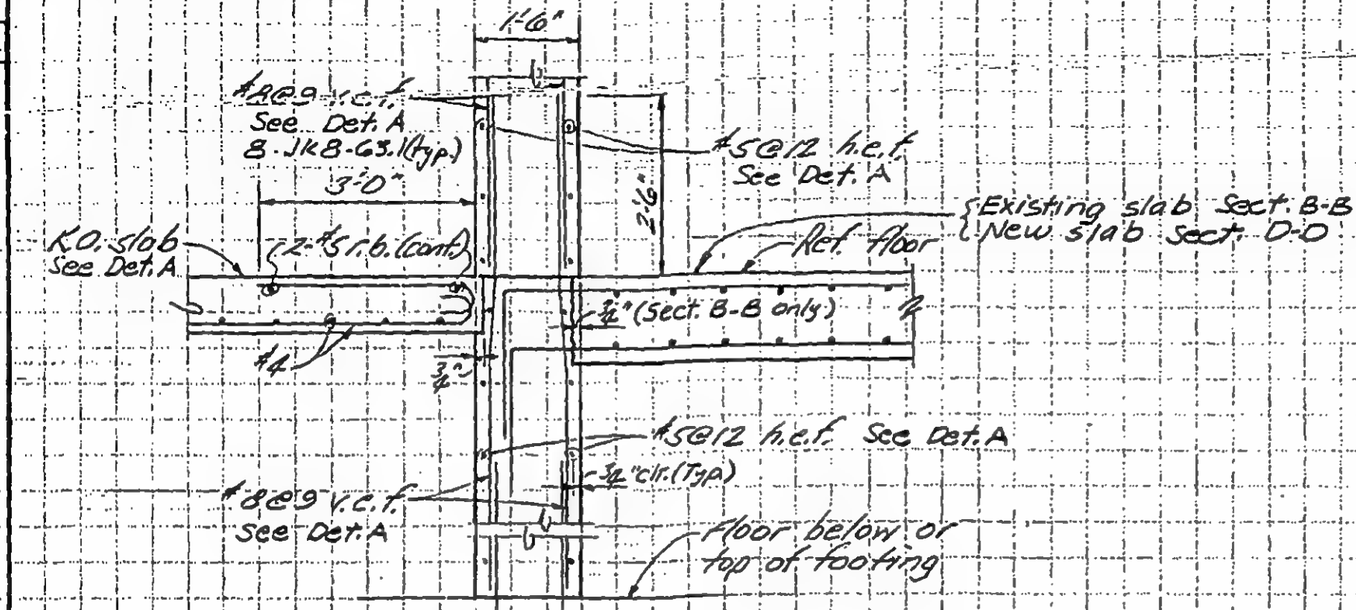

Section B-B
Section D-D

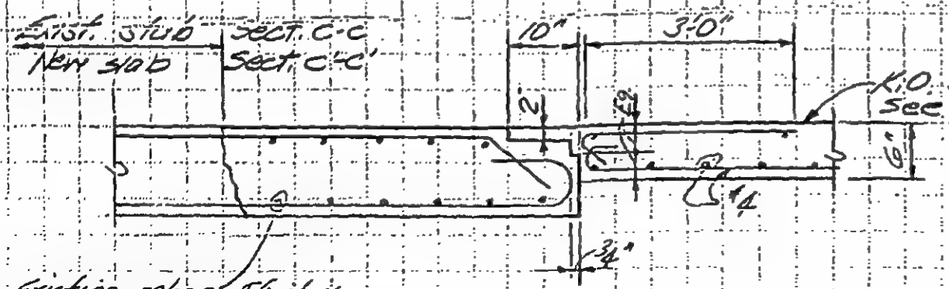

Existing rebar. If it is necessary to cut any bar in this area in order to construct the new wall, splice the bar with same size rebar of 3'-0" min. length. (Section c-c only)

Section c-c
Section c'-c' (sim.)

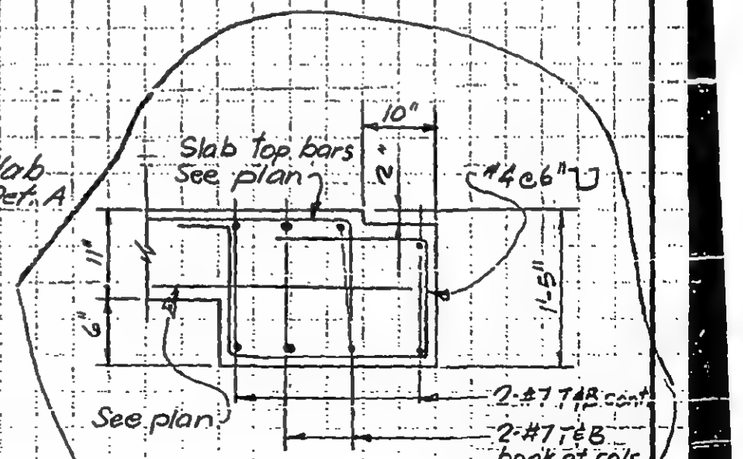

Section H-H

B-JKB-63.2

LICENSED PROFESSIONAL ENGINEER
LESLIE E. ROBERTSON
No. 34360
UNIVERSITY OF THE STATE OF NEW YORK

DESIGNED
DRAWN
REVIEWED

SKILLING, HELLE, CHRISTIANSEN, ROBERTSON — Structural & Civil Engineers

PROJECT: THE WORLD TRADE CENTER | TITLE: PLACEMENT OF WALL REINFORCEMENT AT EL 264'-0" | DATE: 12-17-71

REVISIONS

12-1-72

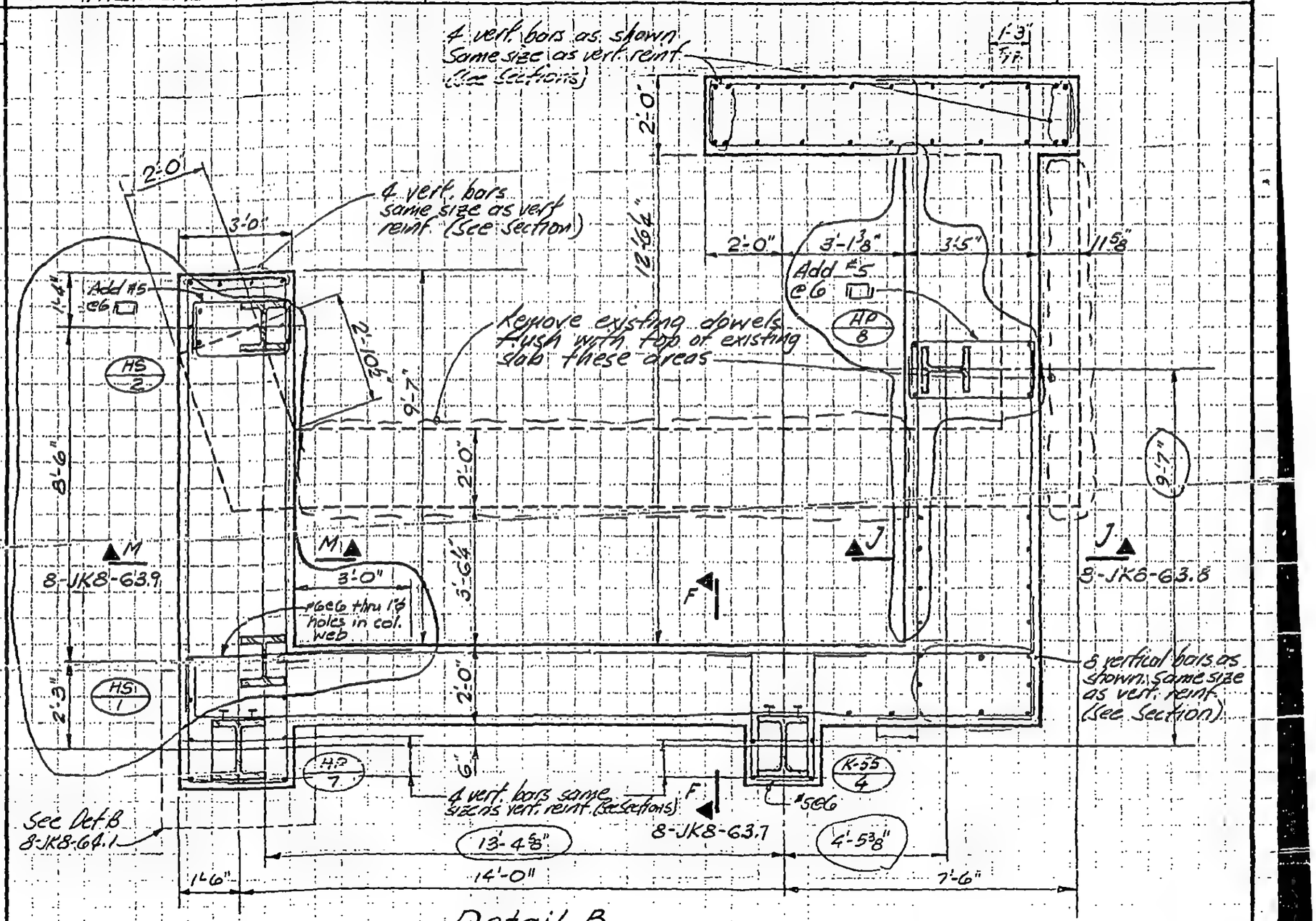

Detail B
(Plan)

LICENSED PROFESSIONAL ENGINEER — LESLIE E. ROBERTSON — No. 34360 — UNIVERSITY OF THE STATE OF NEW YORK

DESIGNED: KC

DRAWN: J Gricius

REVIEWED:

8-JK8-[illegible]

SKILLING, HELLE, CHRISTIANSEN, ROBERTSON — Structural & Civil Engineers

PROJECT: THE WORLD TRADE CENTER | TITLE: PLACEMENT OF WALL REINF. AT EL. 274 | DATE: 12-17-71

REVISIONS

12-1-72

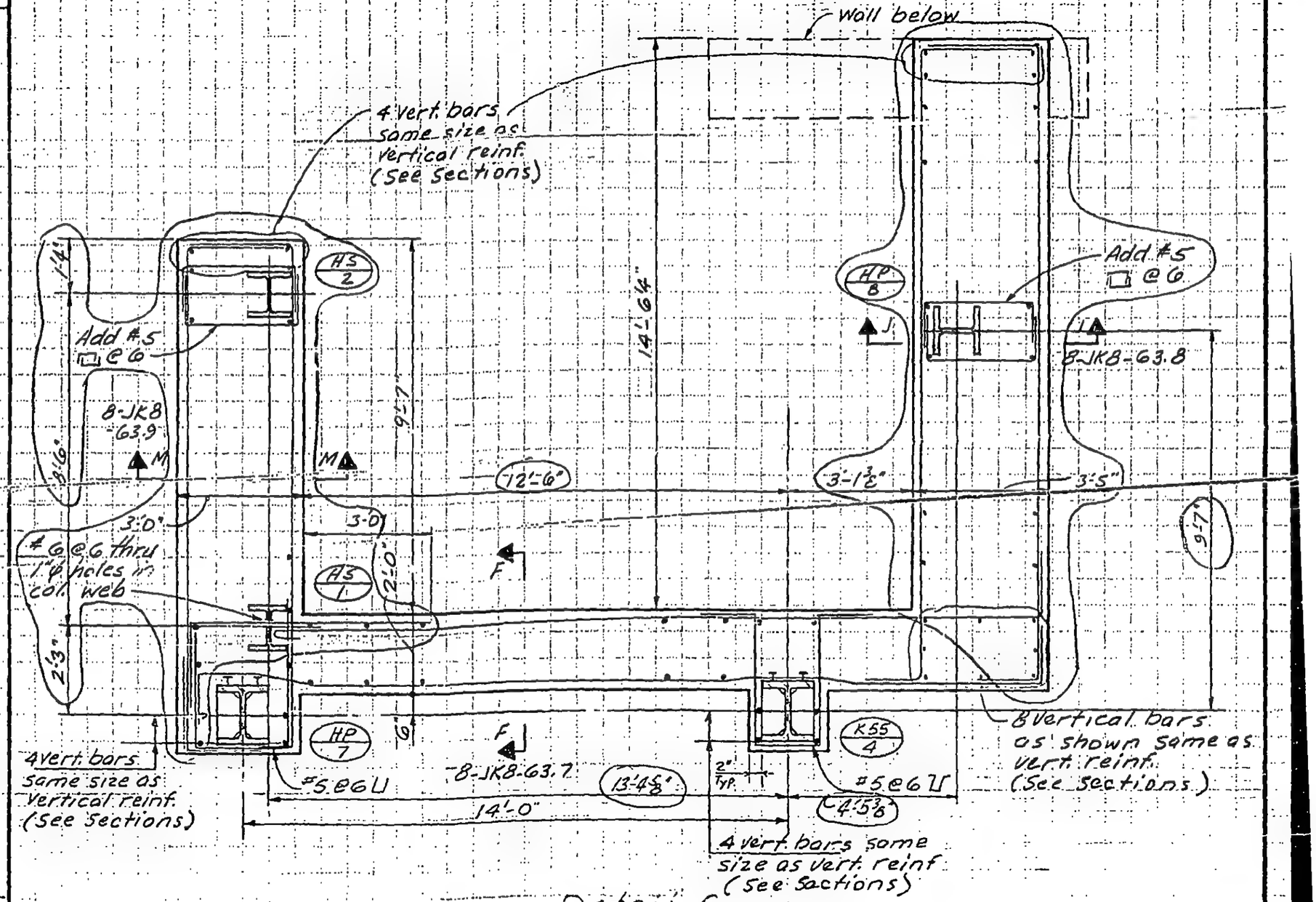

Detail C
(Plan)

LICENSED PROFESSIONAL ENGINEER — LESLIE E. ROBERTSON — No. 34360 — UNIVERSITY OF THE STATE OF NEW YORK

DESIGNED: K. CHIANG

DRAWN: A. FRANQUI

REVIEWED:

8-JK8-63.4

SKILLING, HELLE, CHRISTIANSEN, ROBERTSON — Structural & Civil Engineers

PROJECT: THE WORLD TRADE CENTER | TITLE: PLACEMENT OF WALL REINF. AT EL. 284 | DATE: 1-15-72

REVISIONS

12-1-72

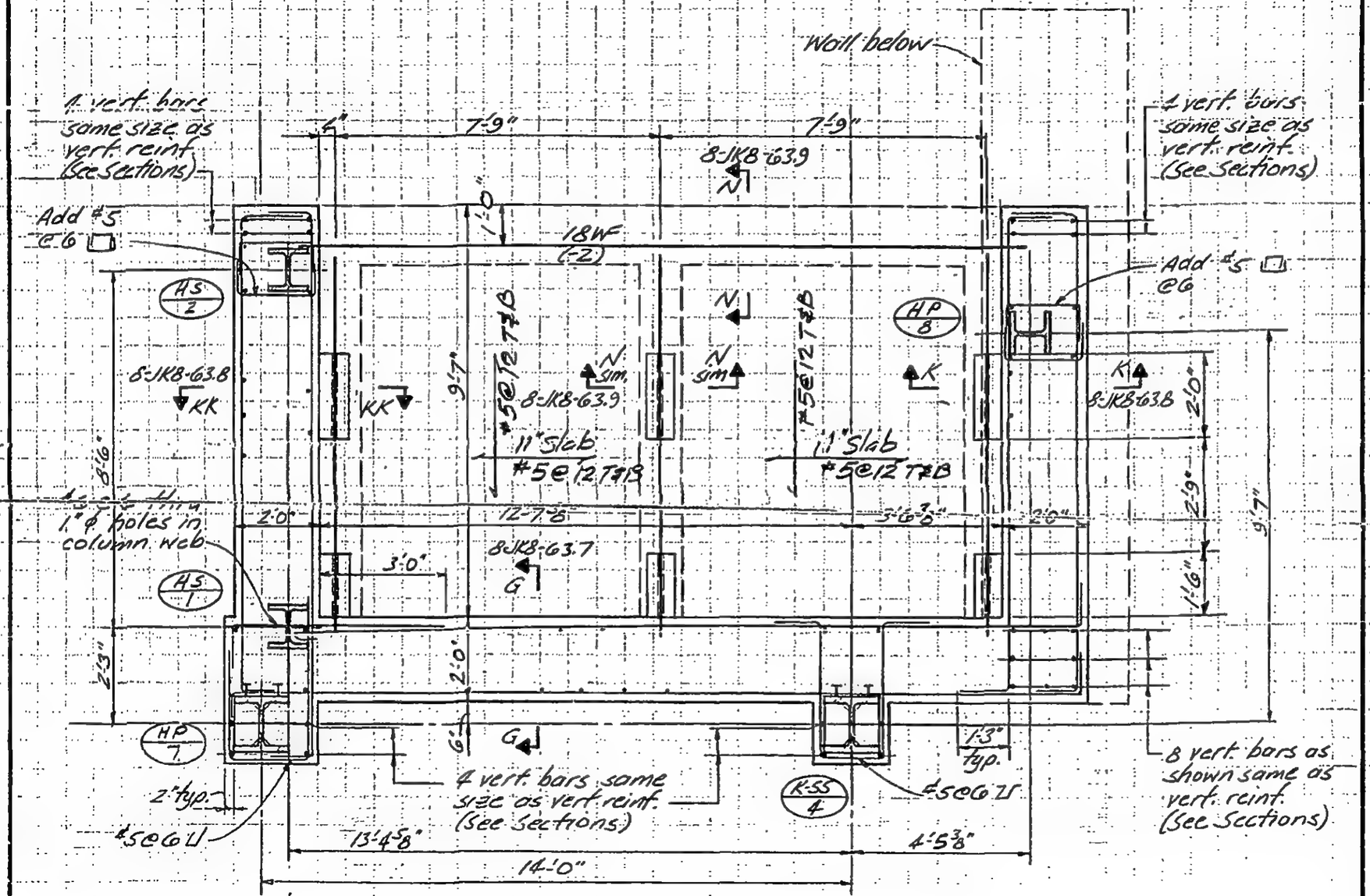

Detail D

LICENSED PROFESSIONAL ENGINEER — LESLIE E. ROBERTSON — NO. 34360 — UNIVERSITY OF THE STATE OF NEW YORK

DESIGNED

DRAWN J. Williams

REVIEWED (P) Brewer

8-JKB-63.5

SKILLING, HELLE, CHRISTIANSEN, ROBERTSON — Structural & Civil Engineers

PROJECT: THE WORLD TRADE CENTER | TITLE: SECTIONS AT HOTEL FREIGHT ELEVATOR WALLS | DATE: 12-17-71

REVISIONS
1-15-72
12-1-72

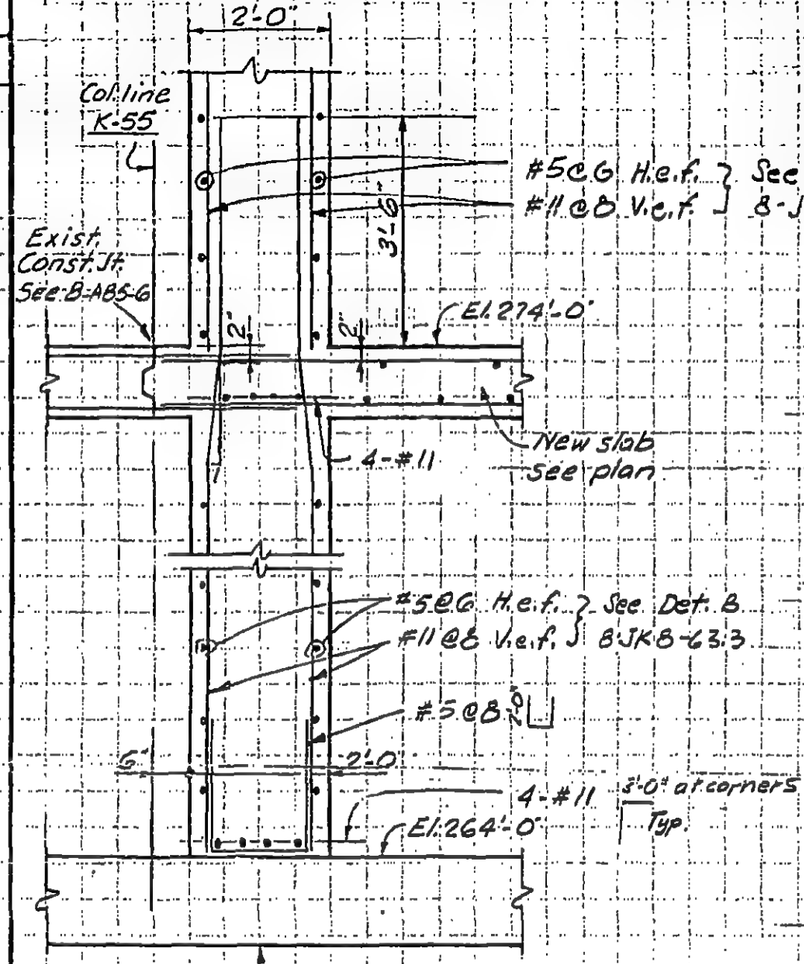

Section F-F

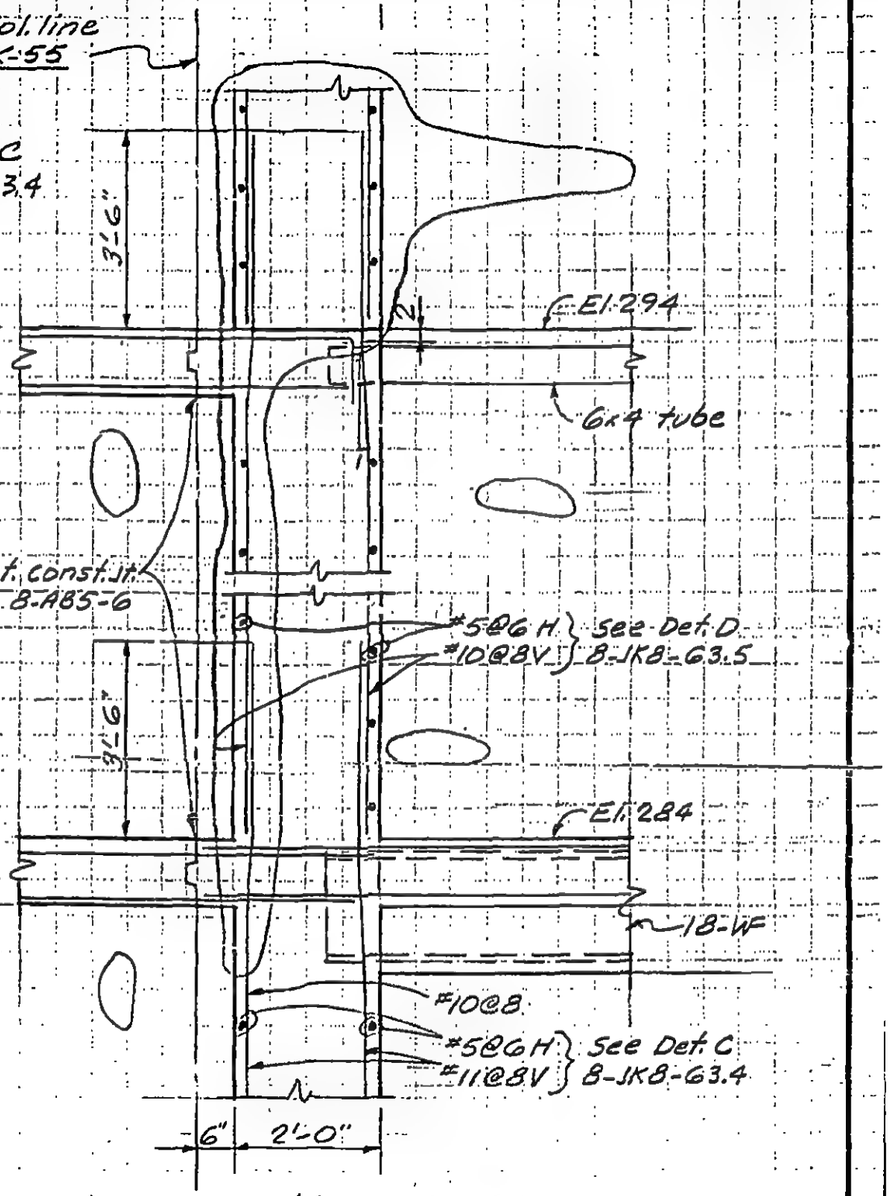

Section G-G

LICENSED PROFESSIONAL ENGINEER — LESLIE E. ROBERTSON — No 34360 — UNIVERSITY OF THE STATE OF NEW YORK

DESIGNED: K. CHIANG
DRAWN: A. FRANQUI
REVIEWED: W Brewer

8-JK8-63.7

SKILLING, HELLE, CHRISTIANSEN, ROBERTSON — Structural & Civil Engineers

PROJECT: THE WORLD TRADE CENTER | TITLE: SECTIONS AT HOTEL FREIGHT ELEVATOR WALLS | DATE: 12-17-71

REVISIONS
1-15-72
12-1-72

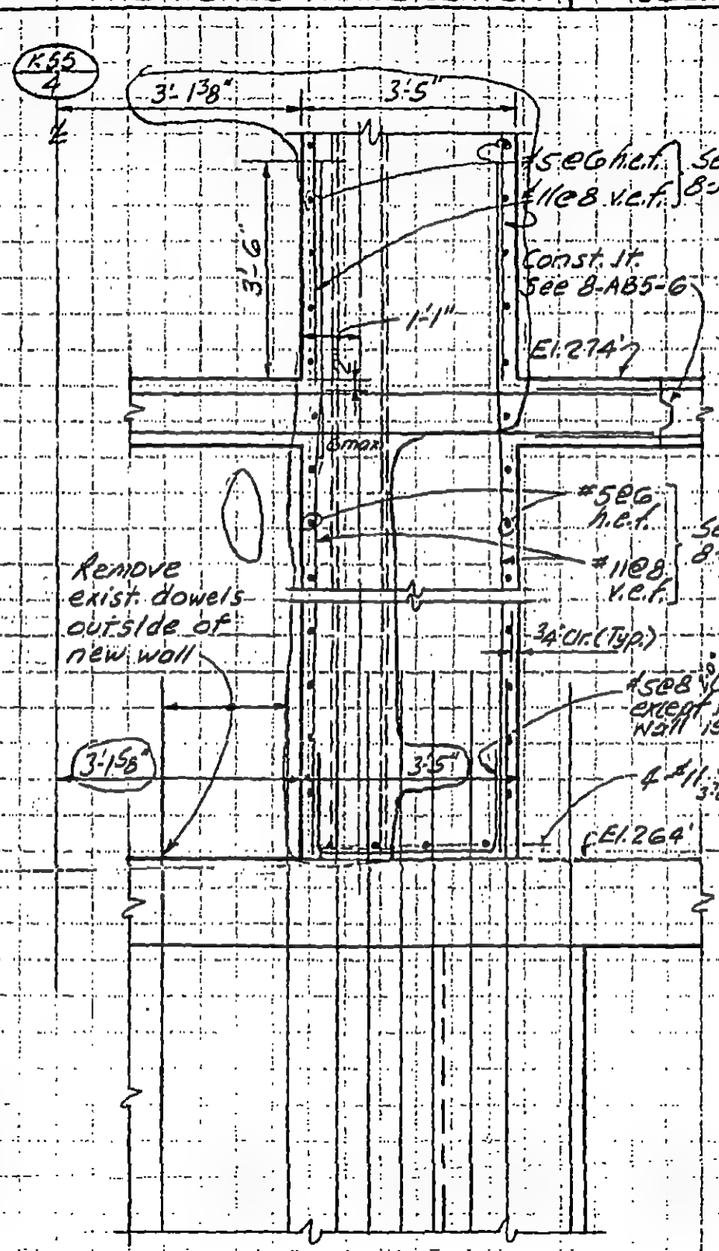

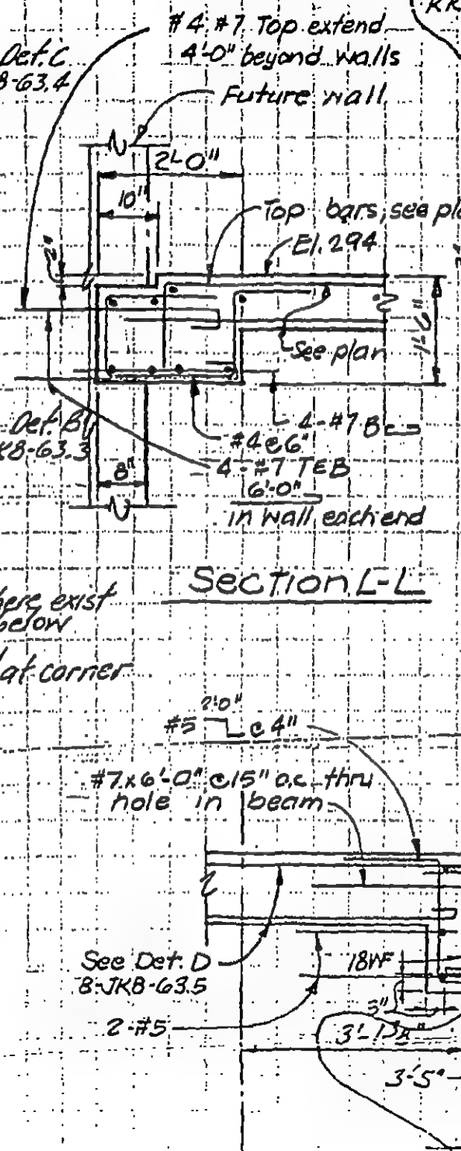

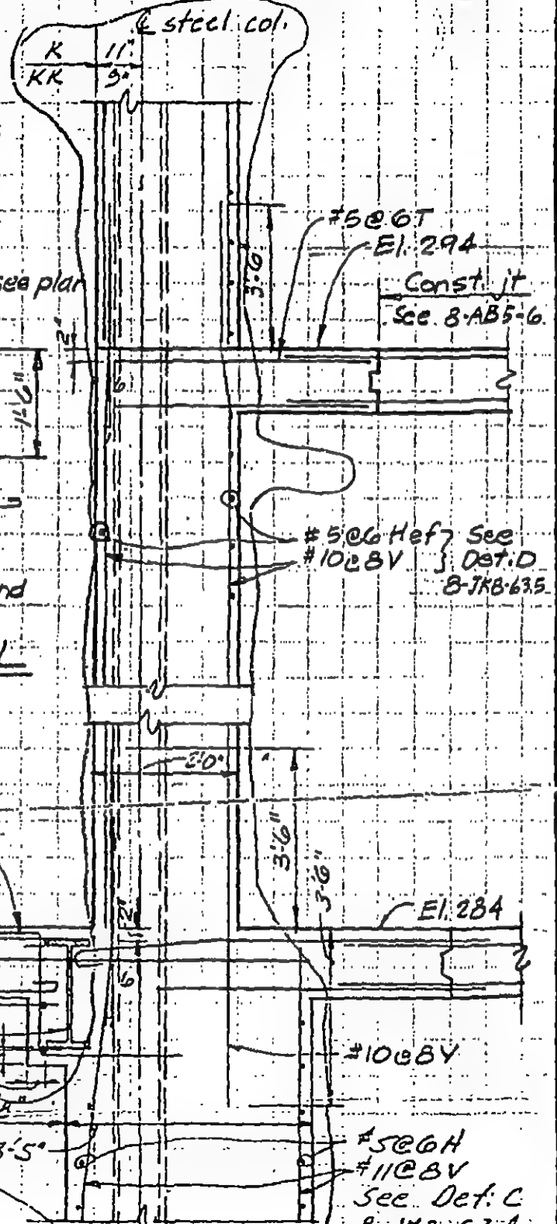

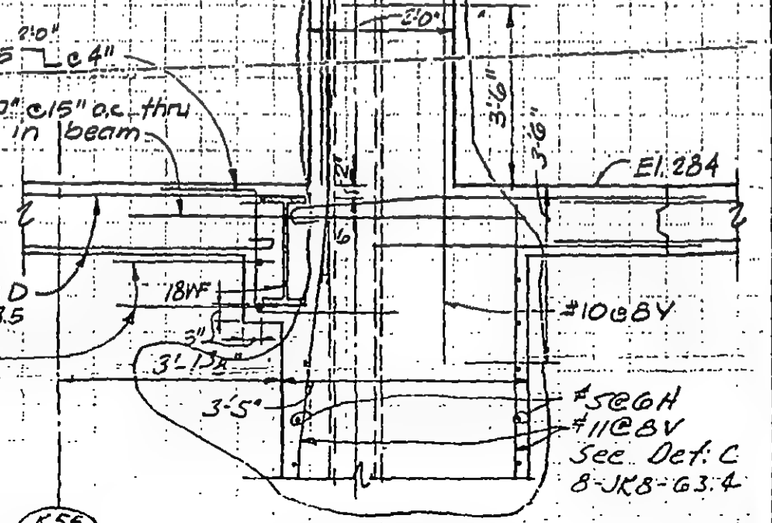

LICENSED PROFESSIONAL ENGINEER — LESLIE E. ROBERTSON — No. 34360 — UNIVERSITY OF THE STATE OF NEW YORK

DESIGNED K. CHIANG
DRAWN A. FRANQUI
REVIEWED M. Brewer

8-1KR-F2.0

SKILLING, HELLE, CHRISTIANSEN, ROBERTSON — Structural & Civil Engineers

PROJECT: THE WORLD TRADE CENTER | TITLE: SECTIONS AT HOTEL FREIGHT ELEVATOR WALLS | DATE: 12-17-71

REVISIONS
1-15-72
12-1-72

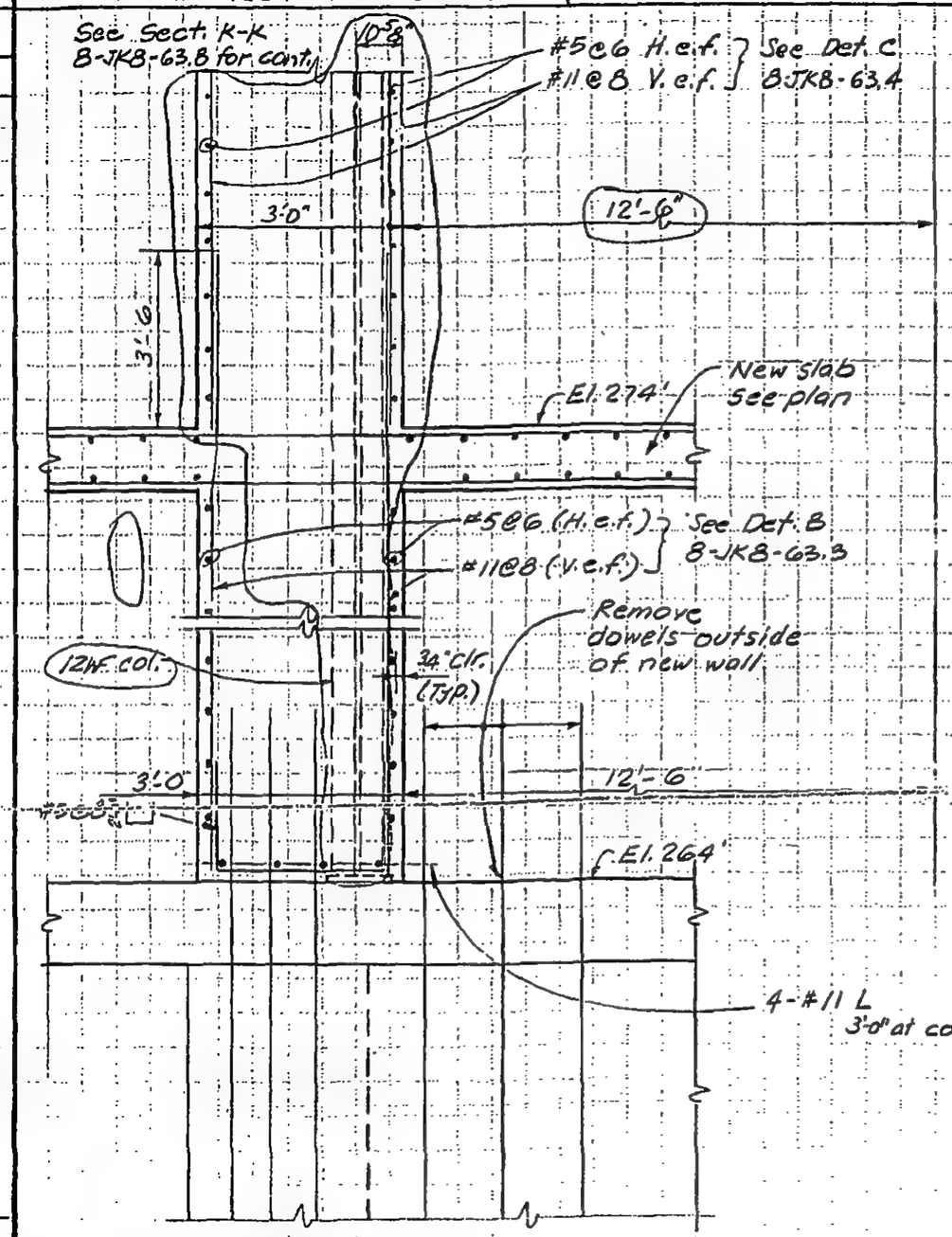

Section M-M

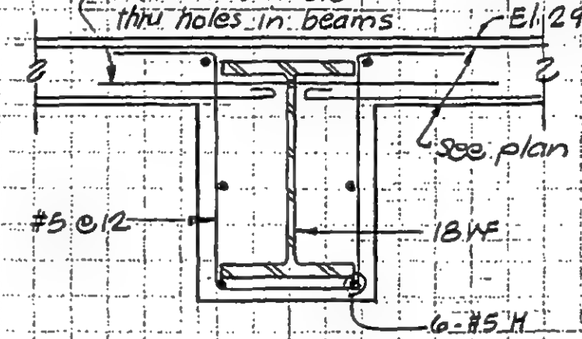

Section N-N

LICENSED PROFESSIONAL ENGINEER
LESLIE E. ROBERTSON
No 34360
UNIVERSITY OF THE STATE OF NEW YORK

DESIGNED K. CHIANG
DRAWN A. FRANQUI
REVISED J. J. Brewer

8-JK8-63.9

SKILLING, HELLE, CHRISTIANSEN, ROBERTSON — Structural & Civil Engineers

PROJECT: THE WORLD TRADE CENTER | TITLE: PLAN AT FREIGHT ELEVATOR - EL. 284 | DATE: 1-15-72

REVISIONS

12-1-72

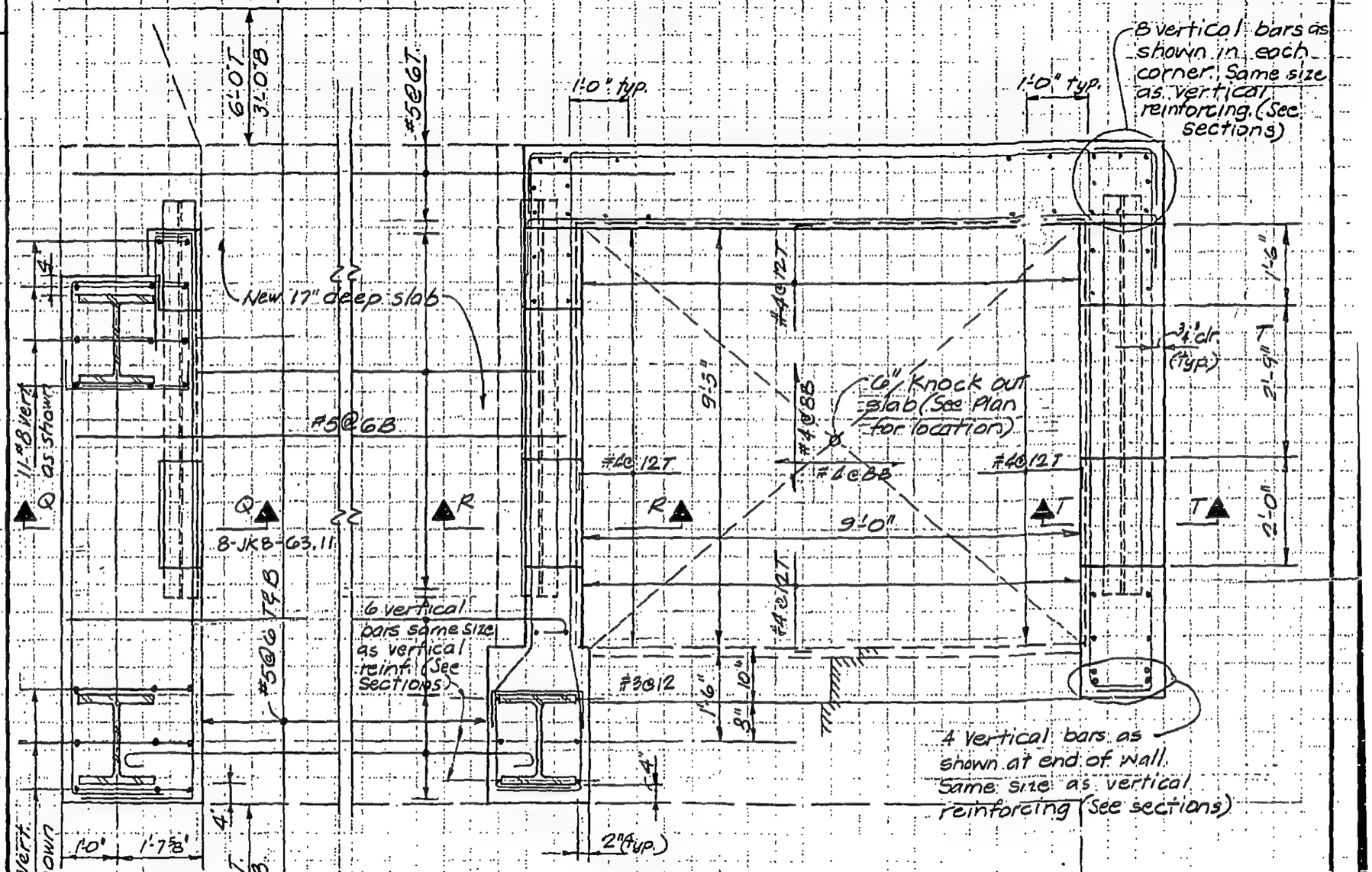

Detail Q

LICENSED PROFESSIONAL ENGINEER — LESLIE E. ROBERTSON — No. 34380 — UNIVERSITY OF THE STATE OF NEW YORK

DESIGNED

DRAWN P.M. Orchi

REVIEWED W. Brewer

8-JK8-63.10

SKILLING, HELLE, CHRISTIANSEN, ROBERTSON — Structural & Civil Engineers

PROJECT: THE WORLD TRADE CENTER | TITLE: SECTIONS AT ELEVATORS | DATE: 1-15-72

REVISIONS

12-1-72

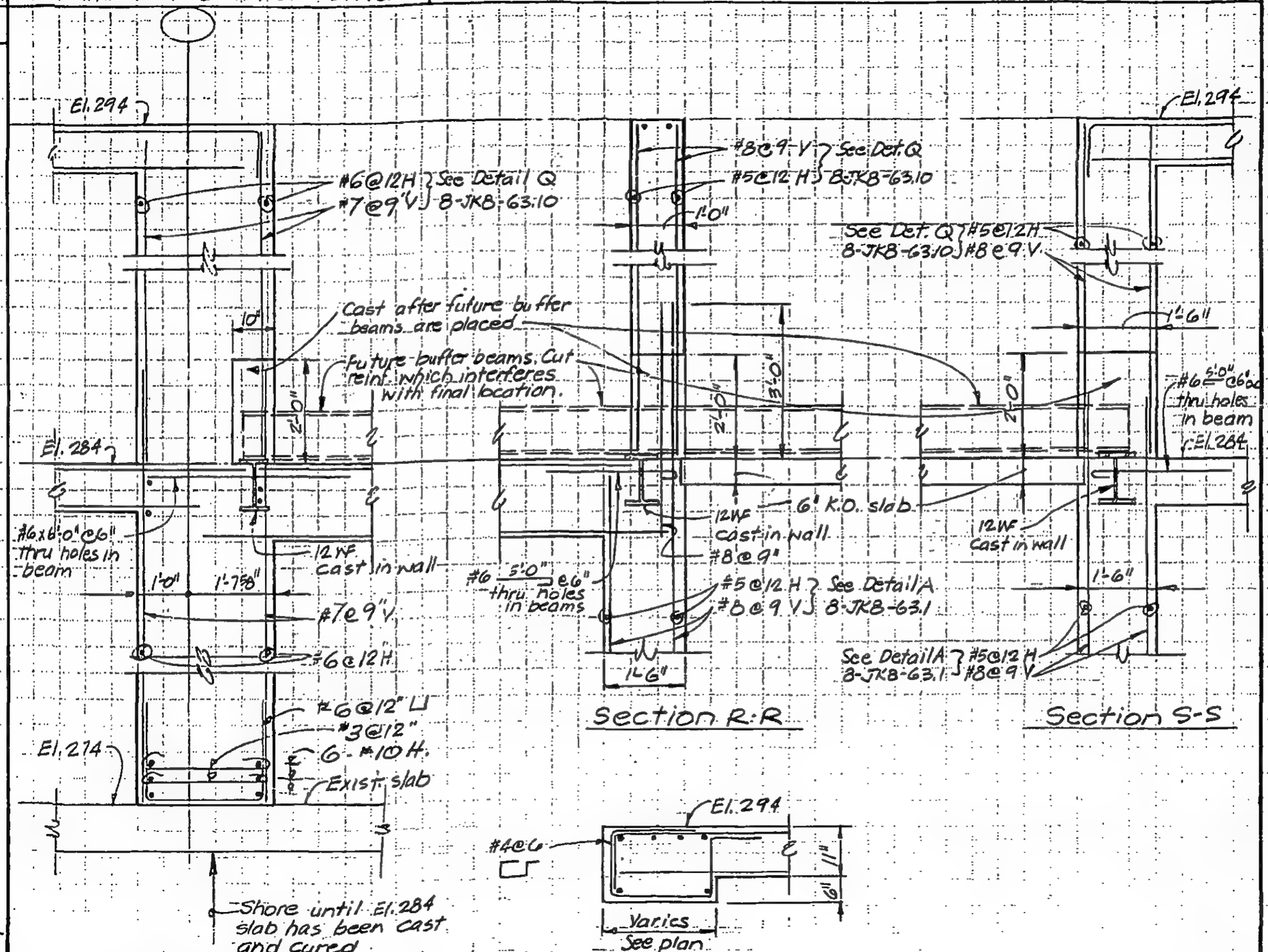

LICENSED PROFESSIONAL ENGINEER — LESLIE E. ROBERTSON — No. 34360 — UNIVERSITY OF THE STATE OF NEW YORK

DESIGNED

DRAWN: P.M. Ozelin

REVIEWED: W. Brewer

8-JK8-63.11

SKILLING, HELLE, CHRISTIANSEN ROBERTSON — Structural & Civil Engineers

PROJECT THE WORLD TRADE CENTER | TITLE BOX-OUT CONCRETE | DATE 12-17-71

REVISIONS
12/28/71
1-15-72

Splice with same size for each bar (T & B) cut

Cut rebar, may be bent until slab is re-casted.

Box-out in existing slab recast after column is erected.

Coat entire surface of existing concrete with an approved epoxy bonding compound prior to casting new concrete.

Place one additional rebar (T & B) for each rebar (T & B) is interrupted

Hook re-bar (T & B) where the cut rebar is interrupted by column.

Note: Orientation of column varies.

Note: Shoring shall be installed as required prior to removal of existing concrete and shall be maintained until new concrete has reached design strength.

Detail A-E (same for both direction)

Note: Cut rebar to be bent up to provide 3'-0" x 3'-0" min. clear. Detail A
Cut rebar to be bent up to provide 6'-0" x 6'-0" min. clear. Detail E

New wall

4'-6" 2'-6" 2'-0"

2'-0" 2'-0" 4'-0"

Remove slab for new column and wall construction recast and reinforce as shown in detail A

H P-7 New column

Detail B

2'-0"

Exist. const. jt.

2'-0" 2'-0" 4'-0"

Detail F

8-JK8-641

LICENSED PROFESSIONAL ENGINEER — LESLIE E. ROBERTSON — No. 34360 — UNIVERSITY OF THE STATE OF NEW YORK

DESIGNED KC
DRAWN J. Gricius
REVIEWED W. Brewer

SKILLING, HELLE, CHRISTIANSEN, ROBERTSON — Structural & Civil Engineers

PROJECT: THE WORLD TRADE CENTER | TITLE: BOX-OUT CONCRETE | DATE: 12-28-71

REVISIONS

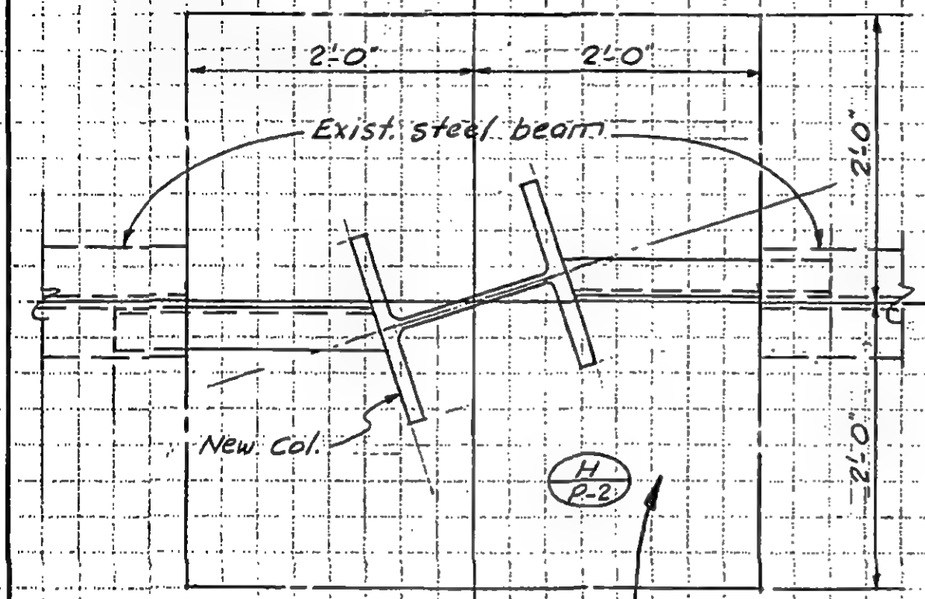

Detail C

Remove existing slab in order to install new col. Recast when directed by the Engineer

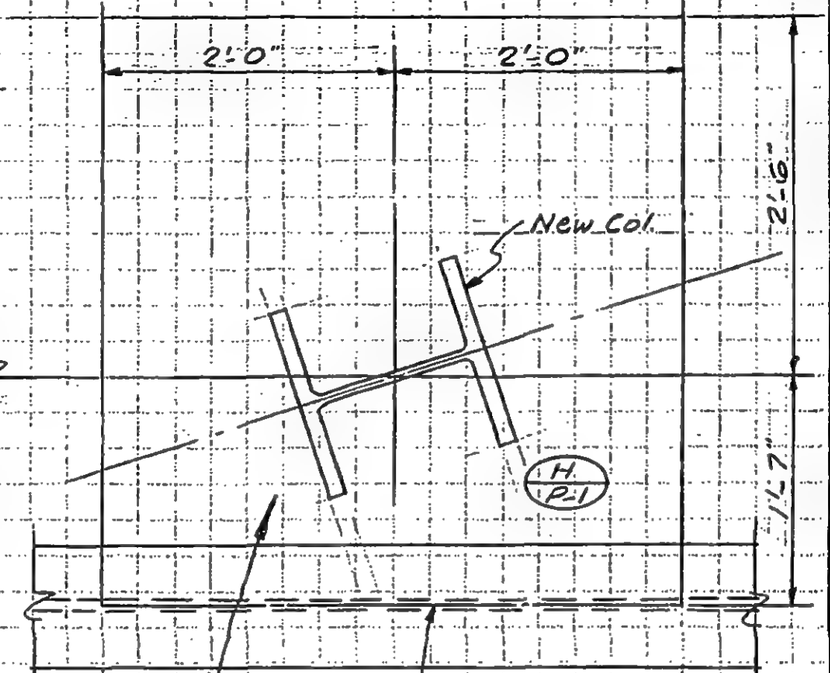

Detail D

Note:
See Detail A, 8-JK8-64.1 for all information not shown.

LICENSED PROFESSIONAL ENGINEER
LESLIE E. ROBERTSON
No. 34360
UNIVERSITY OF THE STATE OF NEW YORK

DESIGNED

DRAWN

REVIEWED

8-JK8-64.2

SKILLING, HELLE, CHRISTIANSEN, ROBERTSON — Structural & Civil Engineers

PROJECT: THE WORLD TRADE CENTER | TITLE: DETAILS AT EL. 264 - ZONE K-1 | DATE: 11-26-71

REVISIONS

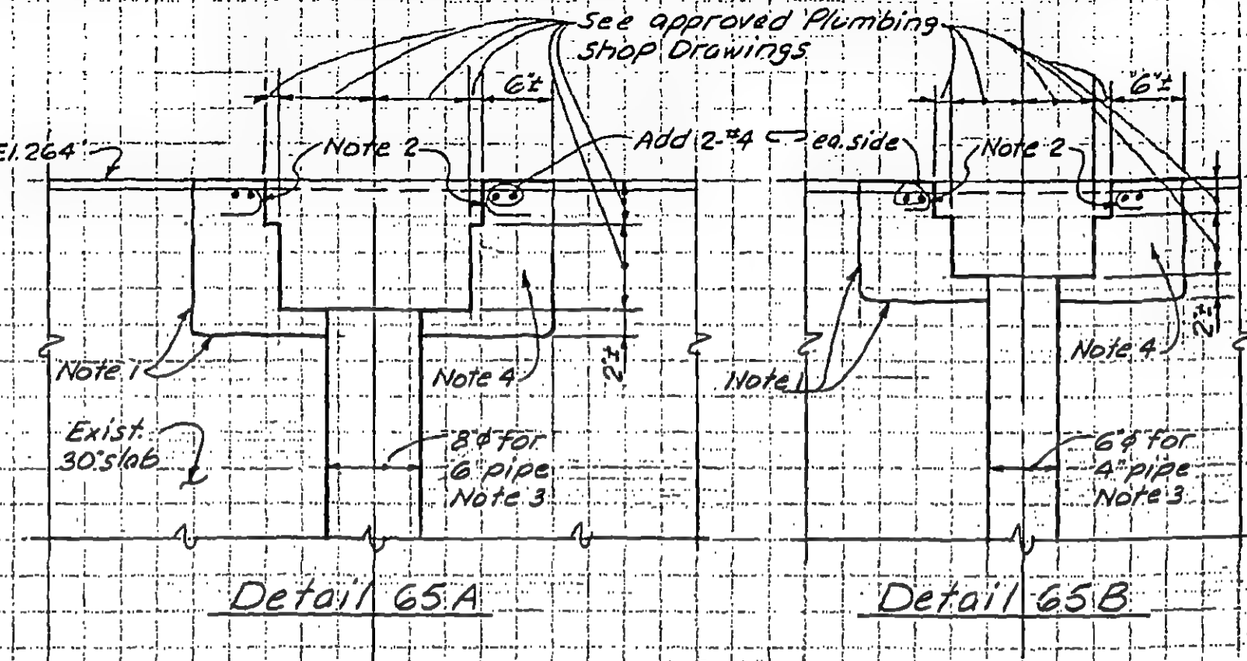

Detail 65A — Detail 65B

Note 1. Remove exist. concrete without damaging existing reinforcing.

Note 2. Cut exist. reinf. interrupted by drain and hook.

Note 3. Core drill round hole for pipe.

Note 4. Set drain and recast concrete around using approved "non-shrink" concrete with approved bonding compound.

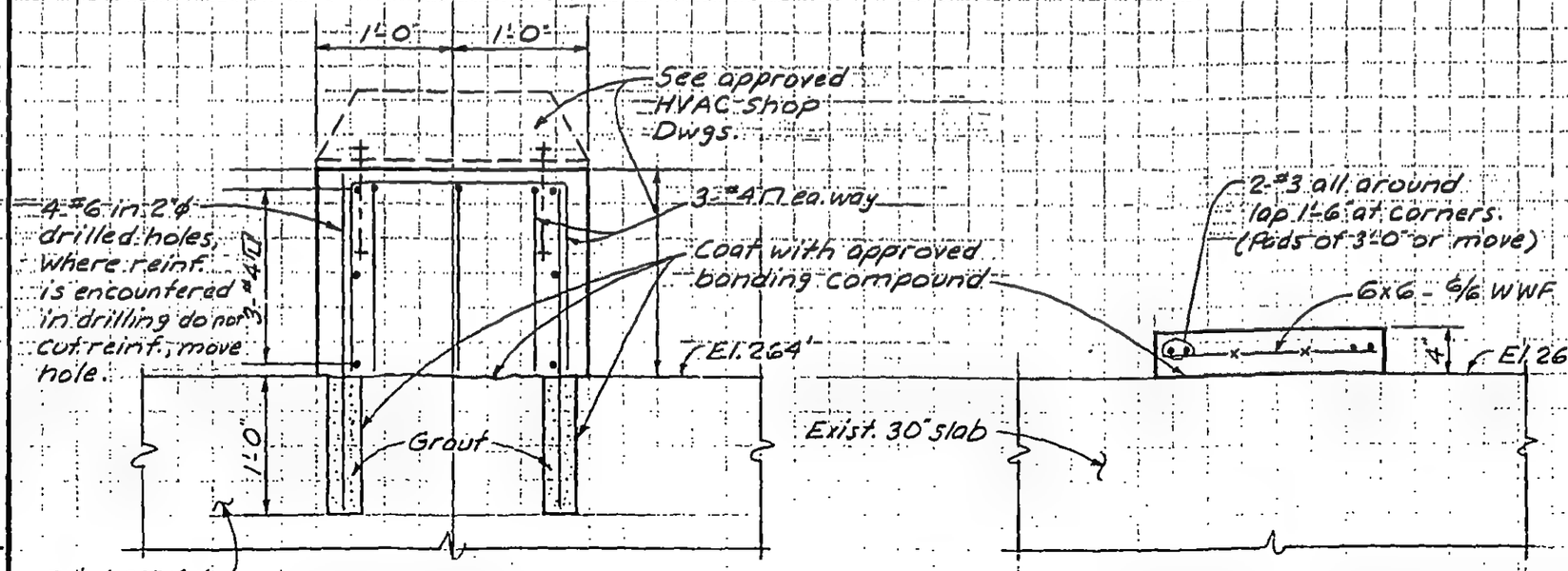

Detail 65C — Detail 65D

LICENSED PROFESSIONAL ENGINEER LESLIE E. ROBERTSON No. 34360 UNIVERSITY OF THE STATE OF NEW YORK

DESIGNED W. BREWER

DRAWN A. FRANQUI

REVIEWED

8-JK8-65.1

SKILLING, HELLE, CHRISTIANSEN, ROBERTSON — Structural & Civil Engineers

PROJECT: THE WORLD TRADE CENTER | TITLE: SECTION AT PASSENGER ELEVATOR AT EL. 294 | DATE: 1-15-72

REVISIONS
3-10-72
3-15-73

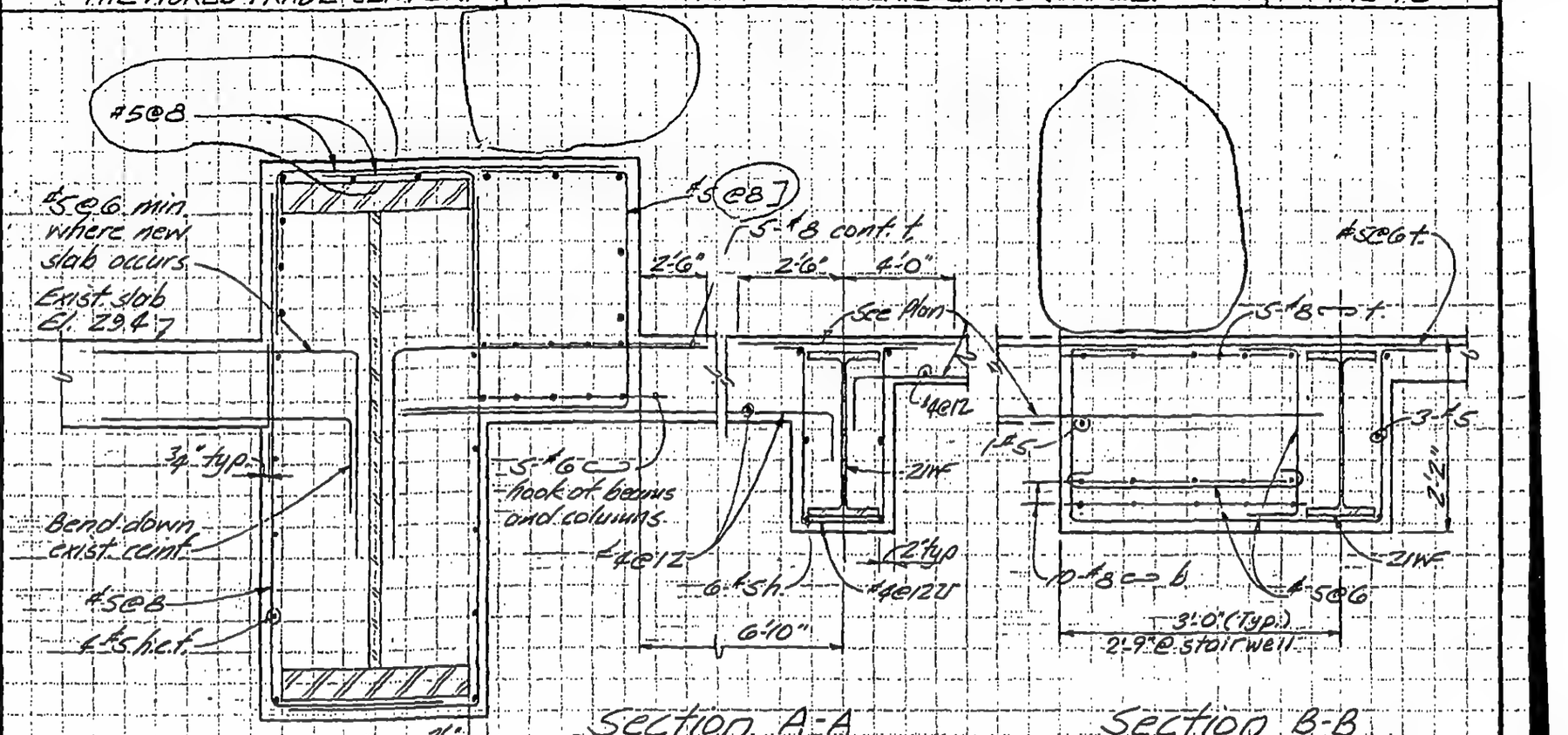

Section A-A

Section B-B

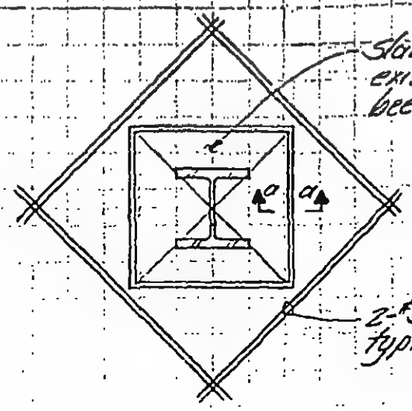

Detail C

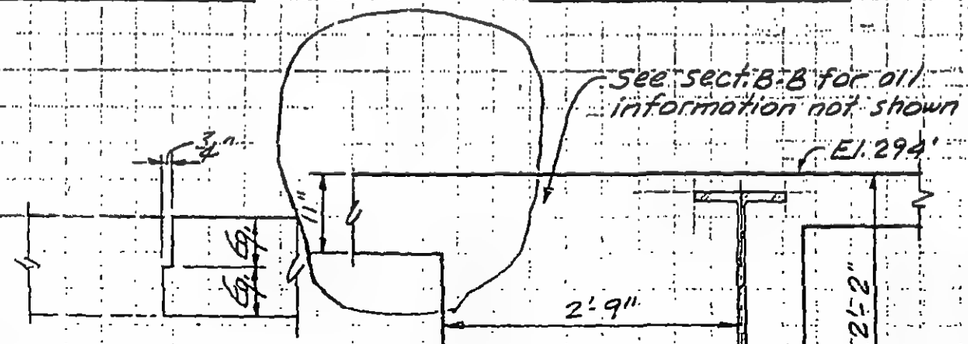

Section a-a

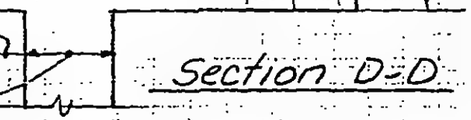

Section D-D

LICENSED PROFESSIONAL ENGINEER
LESLIE E. ROBERTSON
No 34360
UNIVERSITY OF THE STATE OF NEW YORK

DESIGNED

DRAWN
J. Adams

REVIEWED
L.E. Robertson

8 JKB 66

SKILLING, HELLE, CHRISTIANSEN, ROBERTSON — Structural & Civil Engineers

PROJECT THE WORLD TRADE CENTER | TITLE STAIR AT TOWERS | DATE 7-27-73

REVISIONS

10-11-73

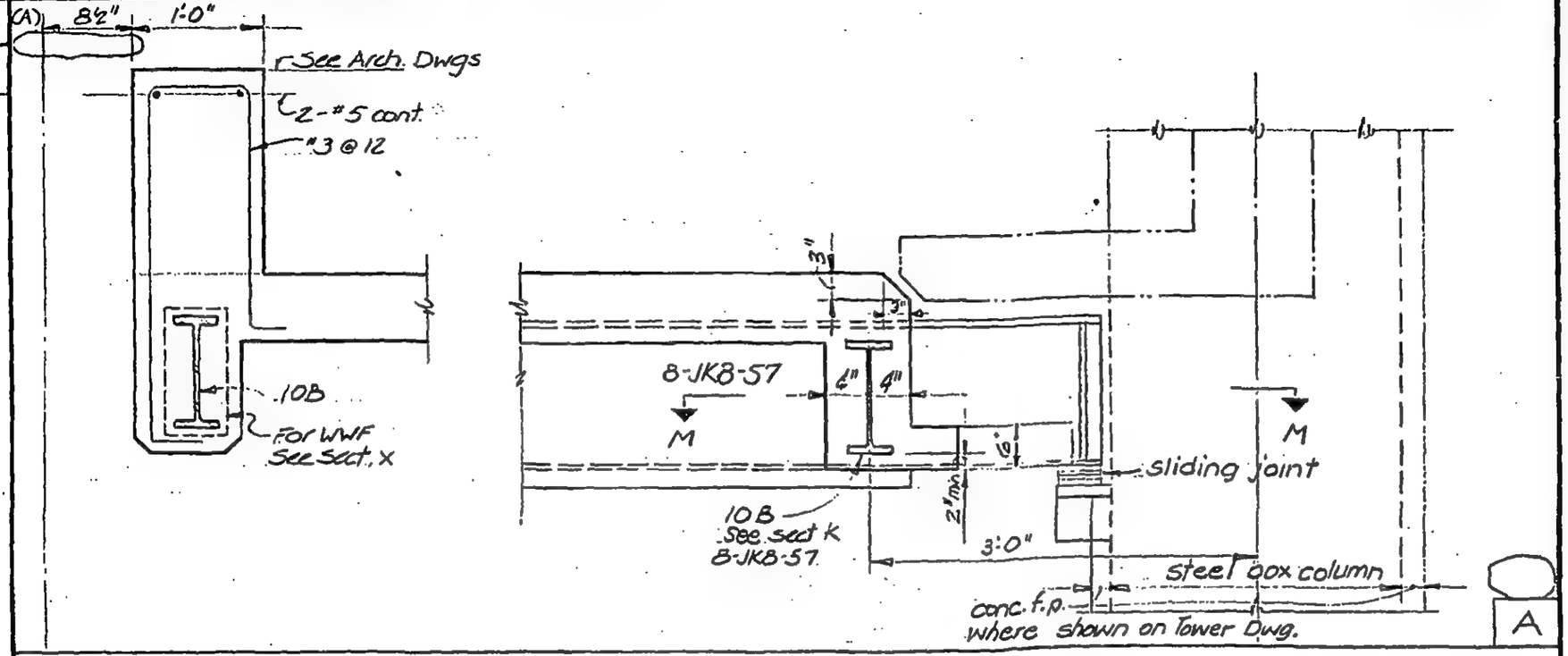

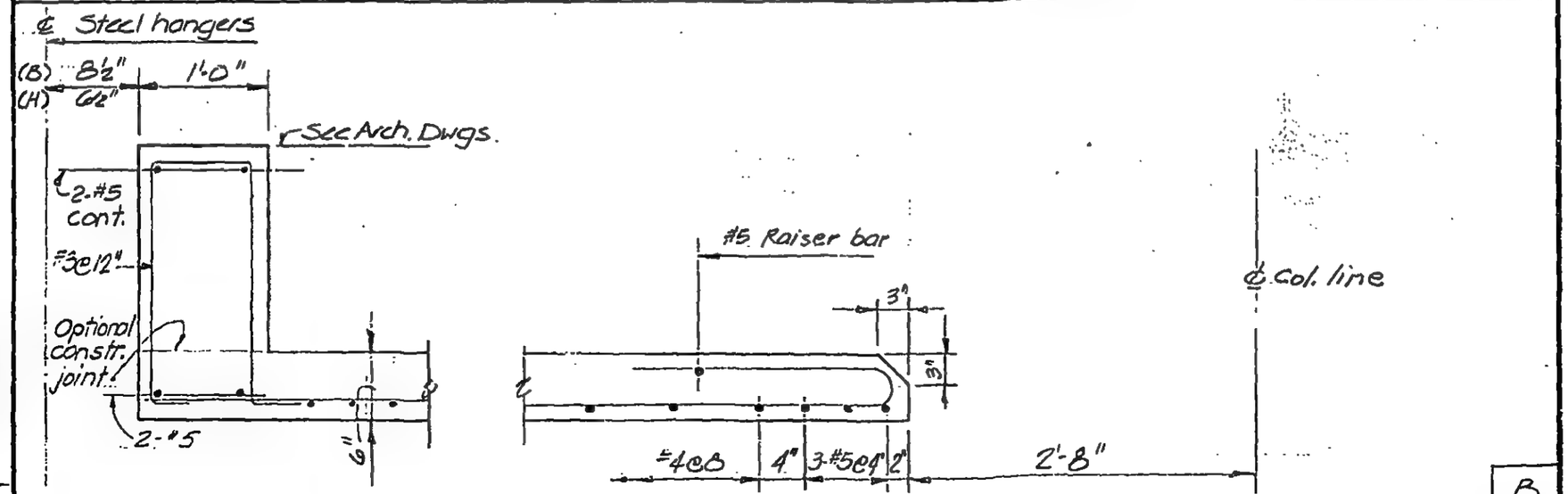

LICENSED PROFESSIONAL ENGINEER LESLIE E. ROBERTSON No 34360 UNIVERSITY OF THE STATE OF NEW YORK

DESIGNED WAB

DRAWN

REVIEWED JTM

SKILLING, HELLE, CHRISTIANSEN, ROBERTSON — Structural & Civil Engineers

PROJECT: THE WORLD TRADE CENTER | TITLE: STAIR AT TOWERS | DATE: 7-27-73

REVISIONS

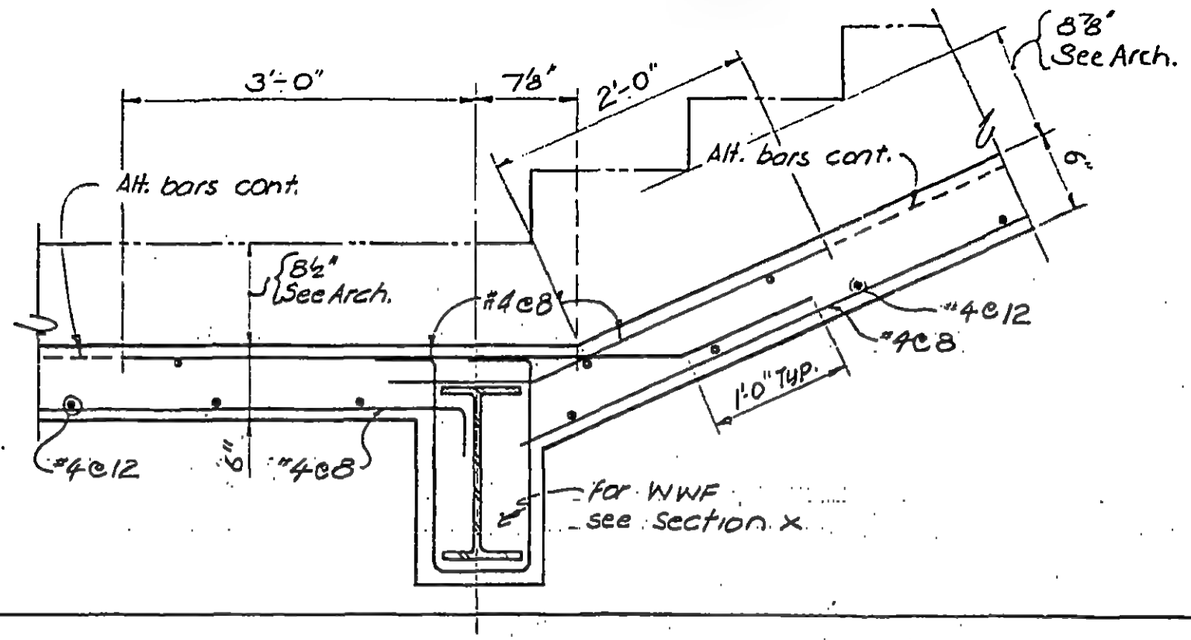

C

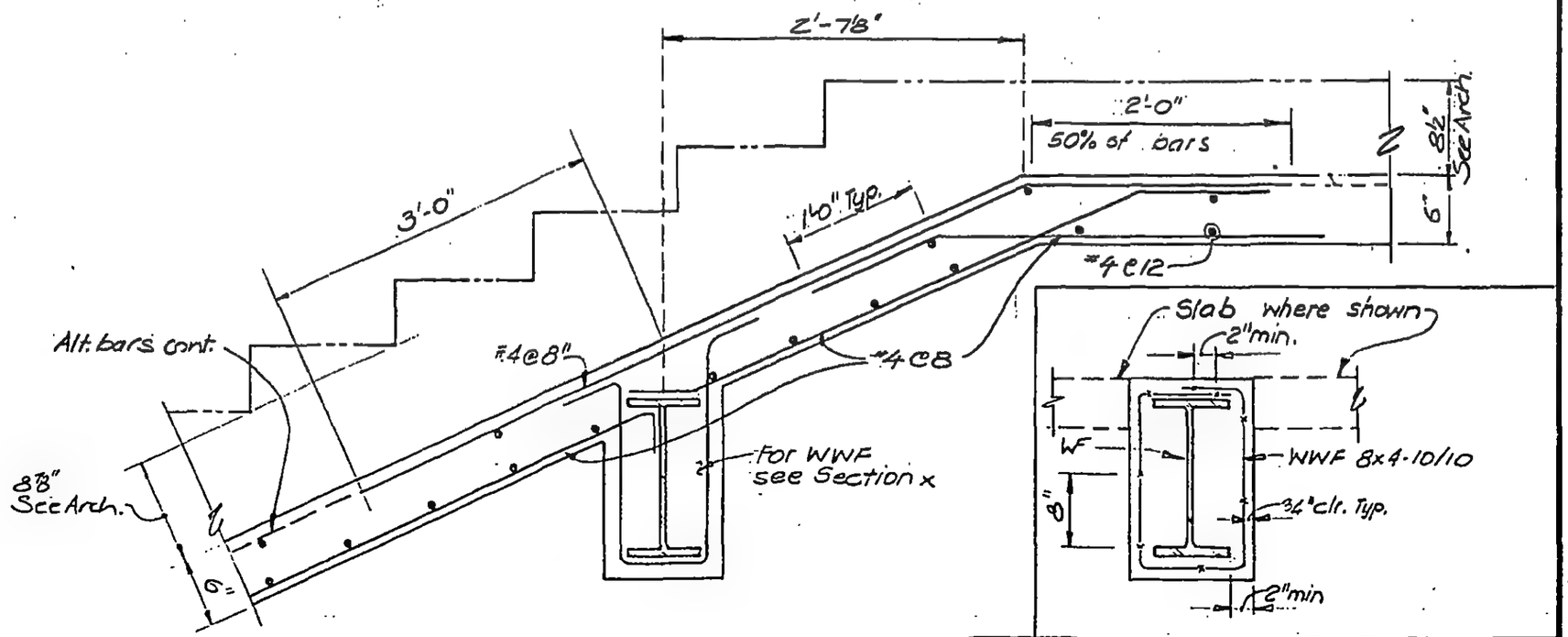

D | X

8JK8-68.2

LICENSED PROFESSIONAL ENGINEER — LESLIE E. ROBERTSON — No. 34360 — UNIVERSITY OF THE STATE OF NEW YORK

DESIGNED WAB

DRAWN P.K.D.

REVIEWED JTM

SKILLING, HELLE, CHRISTIANSEN, ROBERTSON — Structural & Civil Engineers

PROJECT THE WORLD TRADE CENTER | TITLE STAIR AT TOWERS | DATE 7-27-73

REVISIONS

12-19-73

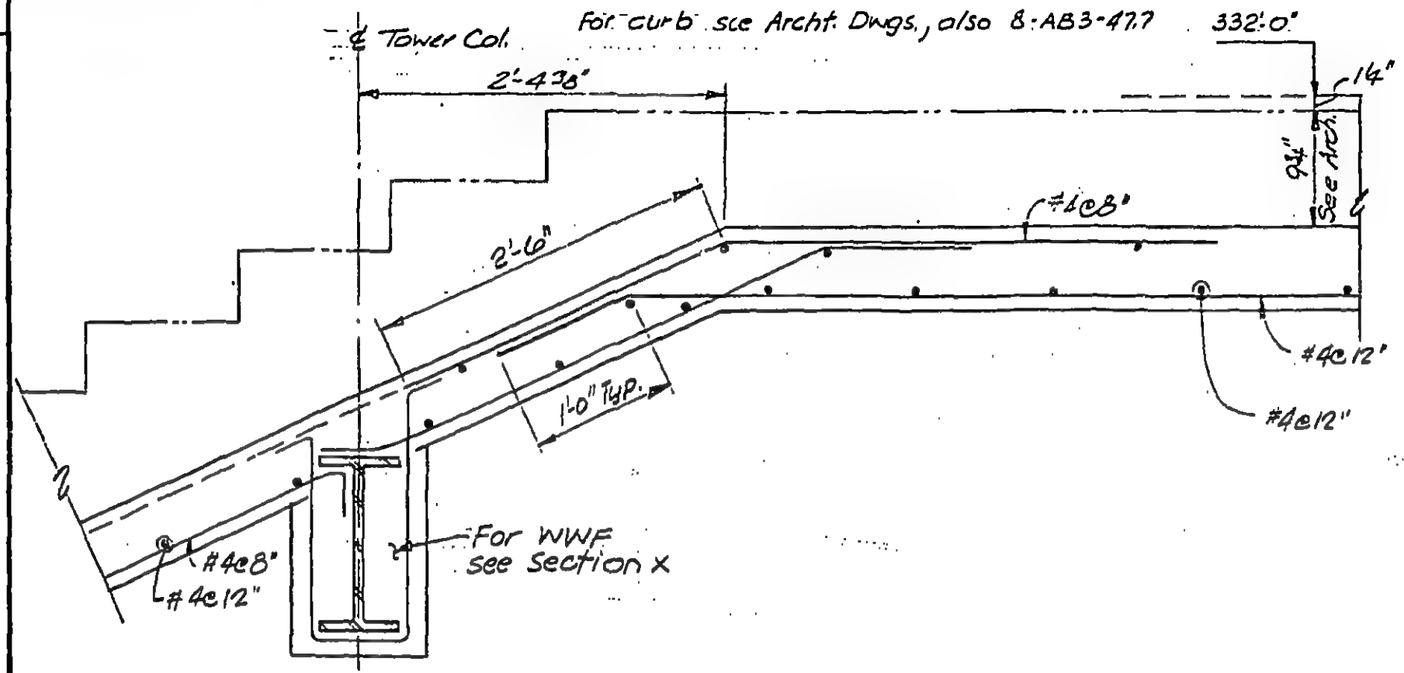

E

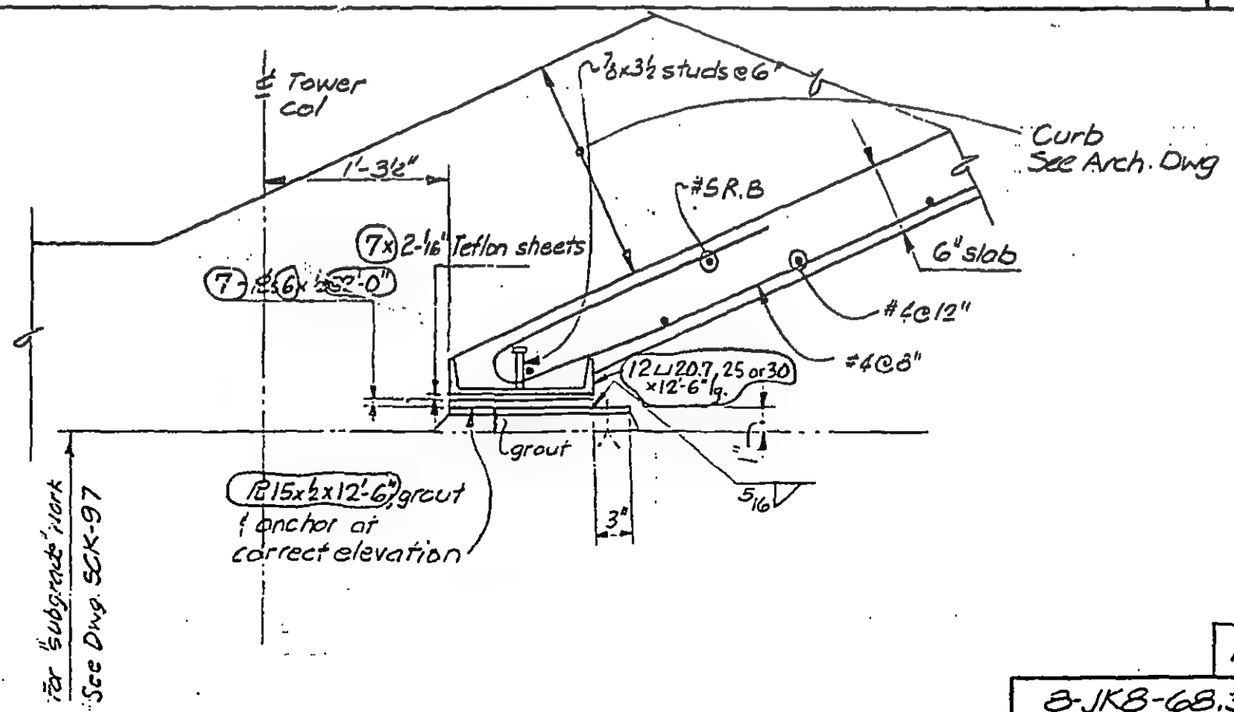

F

8-JK8-68.3

LICENSED PROFESSIONAL ENGINEER — LESLIE E. ROBERTSON — No 34360 — UNIVERSITY OF THE STATE OF NEW YORK

DESIGNED WAB

DRAWN

REVIEWED JTM

SKILLING, HELLE, CHRISTIANSEN, ROBERTSON — Structural & Civil Engineers

PROJECT: THE WORLD TRADE CENTER | TITLE: SECTIONS - EL. 332 | DATE: 10-11-73

REVISIONS

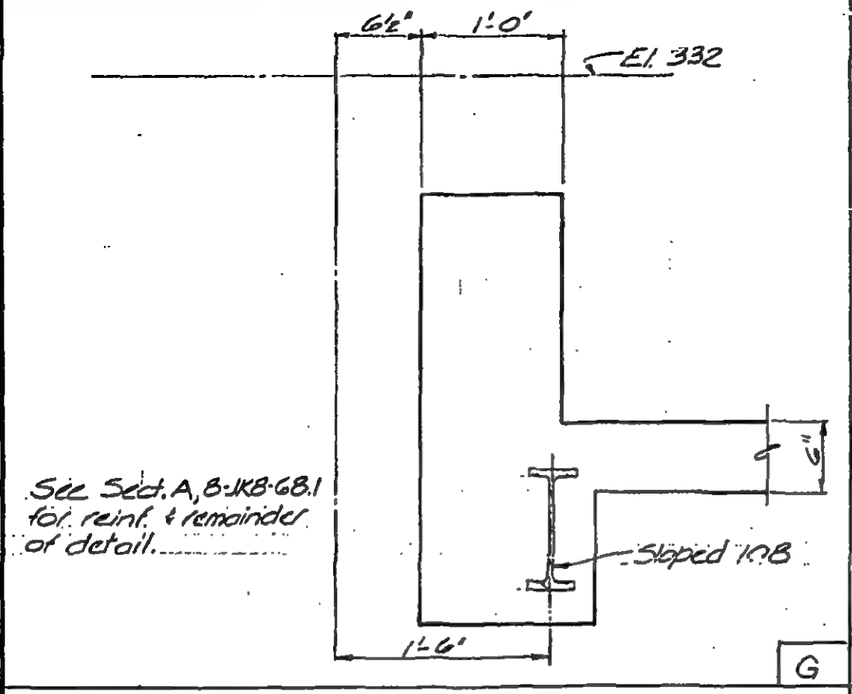

G

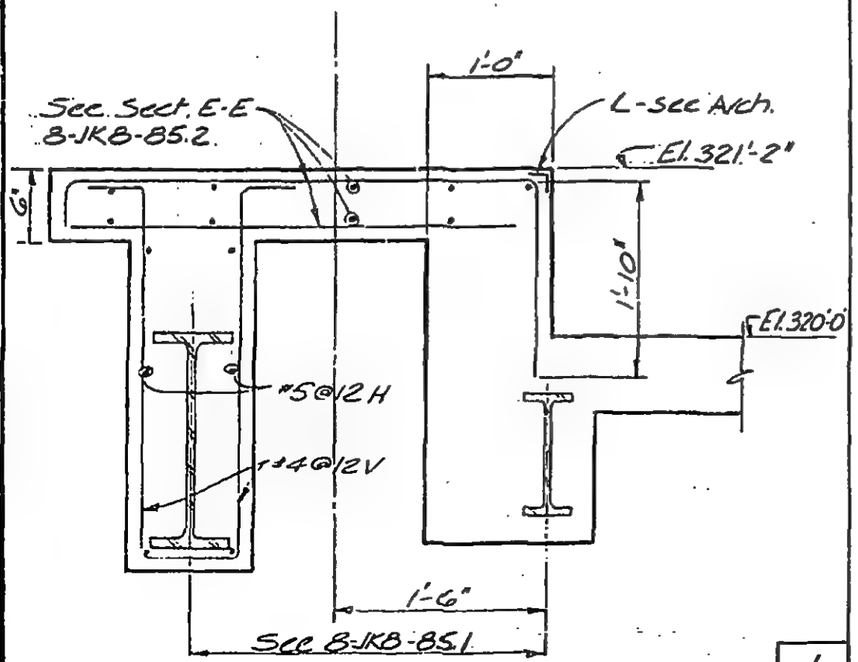

J

LICENSED PROFESSIONAL ENGINEER — LESLIE E. ROBERTSON — NO 34360 — UNIVERSITY OF THE STATE OF NEW YORK

DESIGNED: K.C.
DRAWN: J.B.
REVIEWED:

8-JKB-68.4

SKILLING, HELLE, CHRISTIANSEN, ROBERTSON — Structural & Civil Engineers

PROJECT: WORLD TRADE CENTER | TITLE: SECTIONS El. 332 | DATE: 7-27-73

REVISIONS
9-19-73
4-5-74

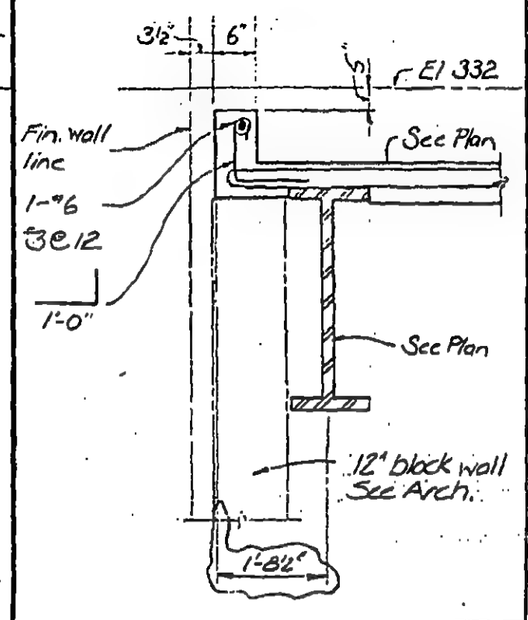

A

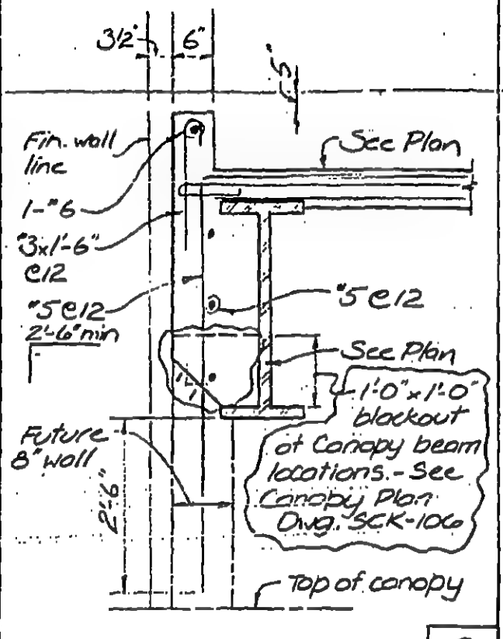

B

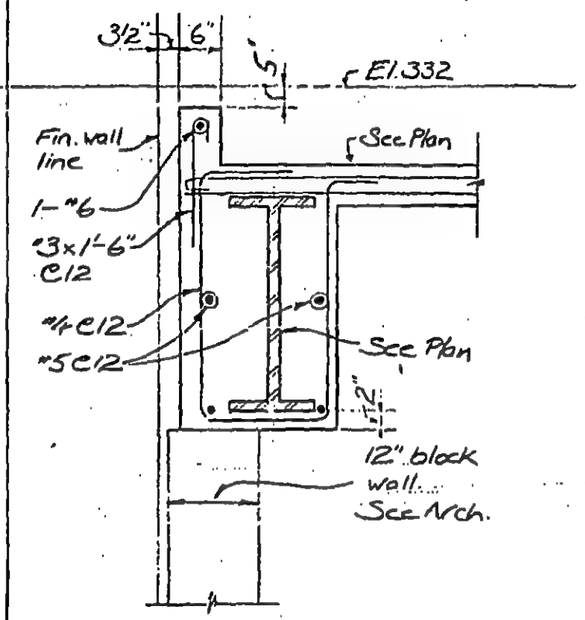

C

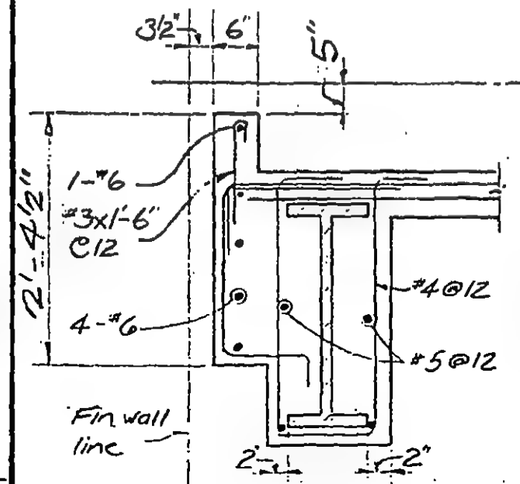

D

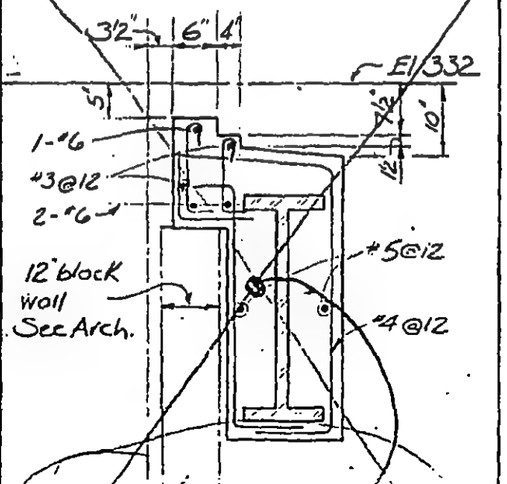

E

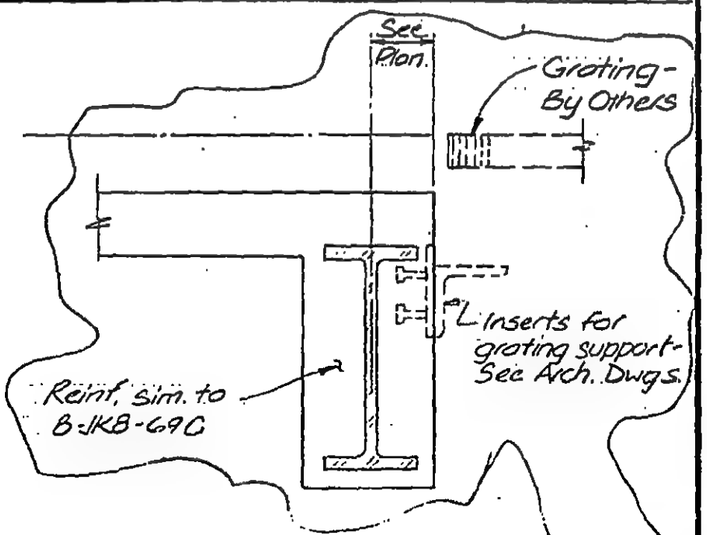

F

8-JK8-69.1

LICENSED PROFESSIONAL ENGINEER
LESLIE E. ROBERTSON
No. 34360
UNIVERSITY OF THE STATE OF NEW YORK

DESIGNED: NAB
DRAWN: J Banks
REVIEWED: JTM

SKILLING, HELLE, CHRISTIANSEN, ROBERTSON — Structural & Civil Engineers

PROJECT: THE WORLD TRADE CENTER

TITLE: SECTIONS - EL. 332

DATE: 7-27-73

REVISIONS

9-19-73

4-5-74

10-21-74

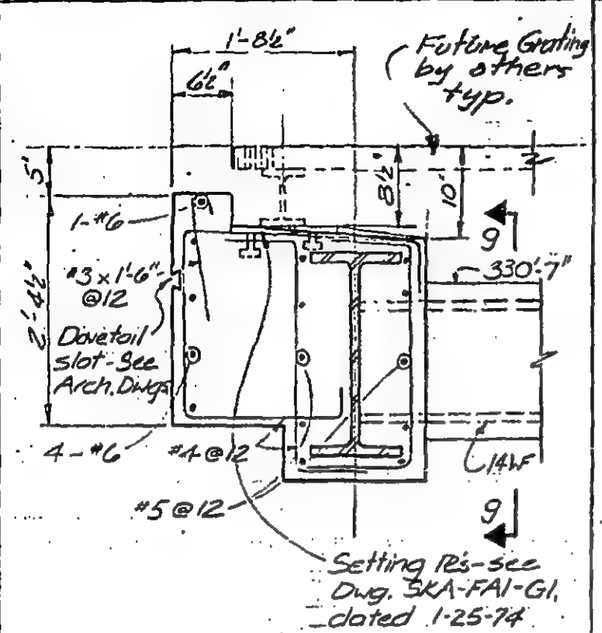

G

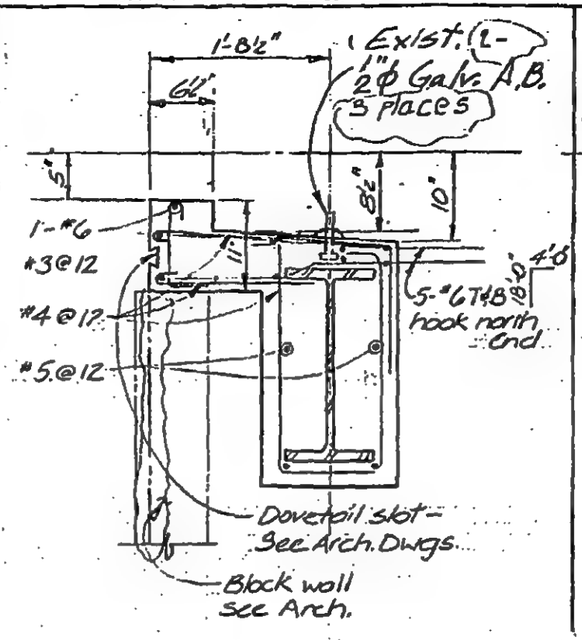

H

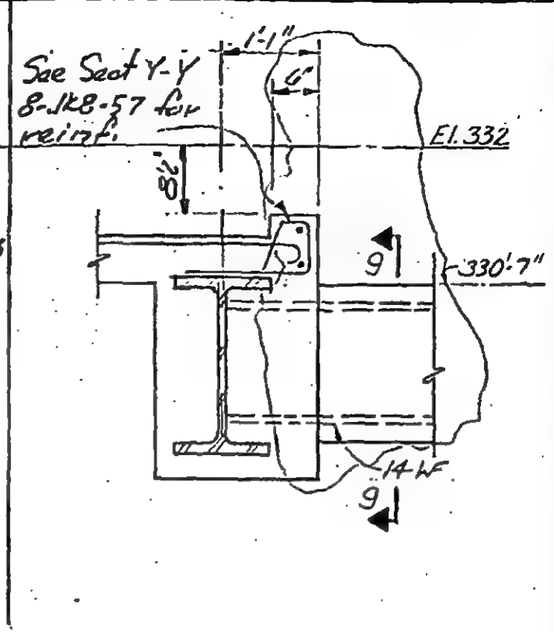

J

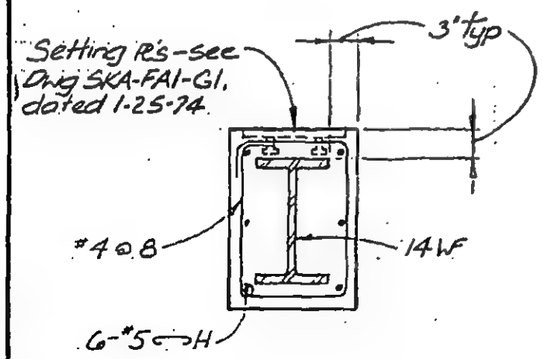

9

8-JK8-69.2

LICENSED PROFESSIONAL ENGINEER
LESLIE E. ROBERTSON
No 34360
UNIVERSITY OF THE STATE OF NEW YORK

DESIGNED: WAB

DRAWN: J Banks

REVIEWED: JTM

SKILLING, HELLE, CHRISTIANSEN, ROBERTSON — Structural & Civil Engineers

PROJECT THE WORLD TRADE CENTER | TITLE SECTIONS - EL. 332 | DATE 10-11-73.

REVISIONS
4-5-74
10/21/74

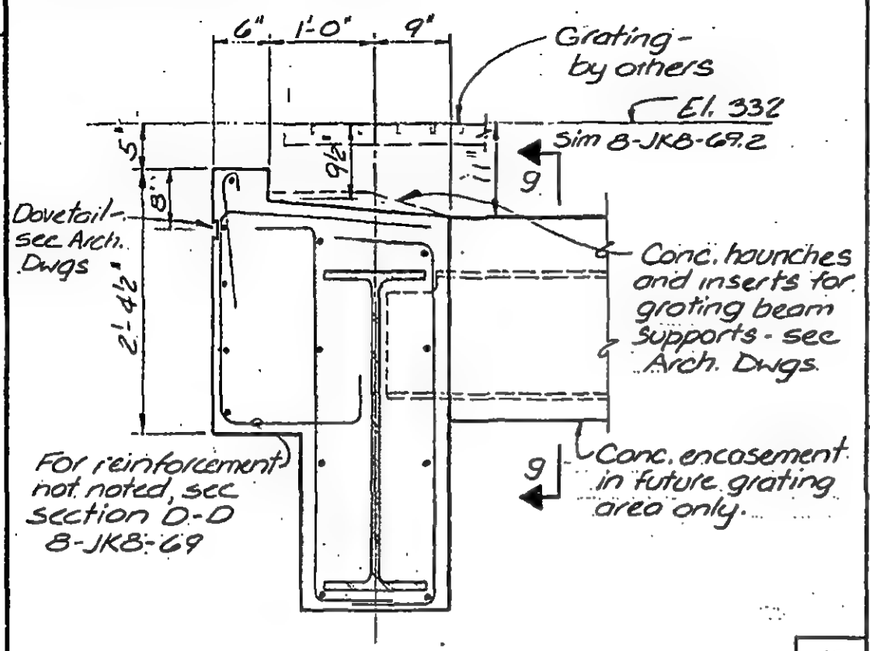

K

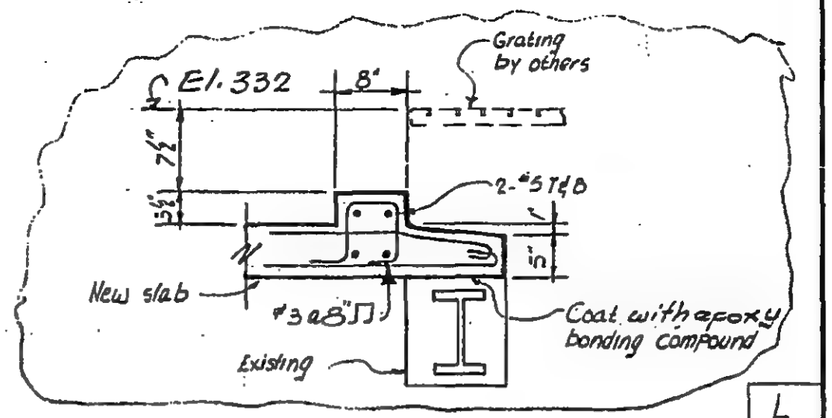

L

Note 7. Remove existing concrete without damage to exist. reinforcing.
Clean face of exist. concrete and throughly coat entire surface with epoxy bonding compound.

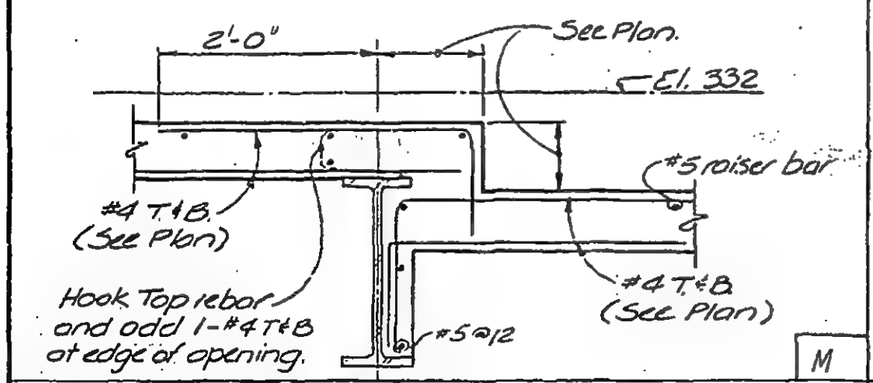

M

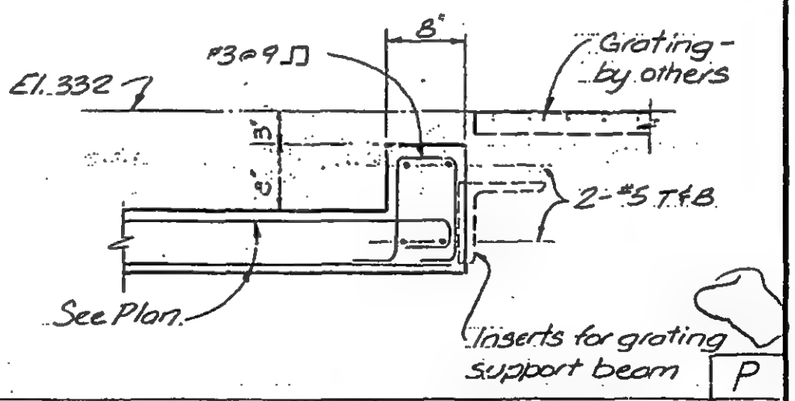

P

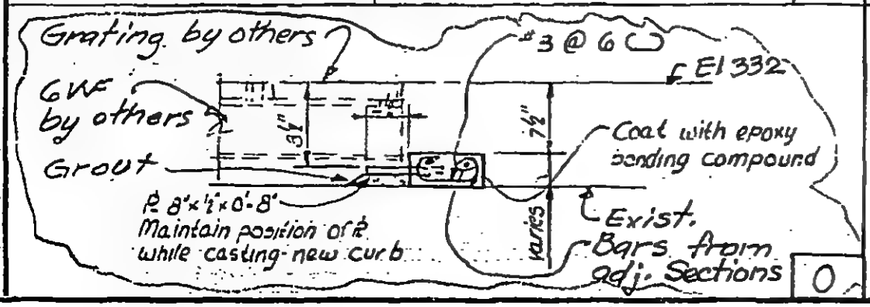

O

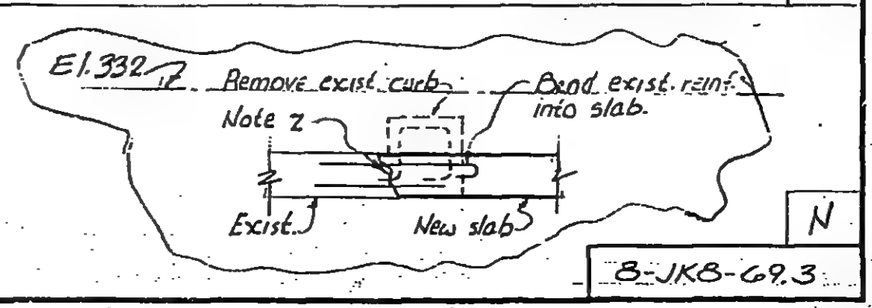

N

8-JK8-69.3

LICENSED PROFESSIONAL ENGINEER — LESLIE E. ROBERTSON — No 34360 — UNIVERSITY OF THE STATE OF NEW YORK

DESIGNED K.C.
DRAWN J.B.
REVIEWED J.T.M.

SKILLING, HELLE, CHRISTIANSEN, ROBERTSON | Structural & Civil Engineers

PROJECT WORLD TRADE CENTER | TITLE SECTION EL.-332 | DATE 10-21-74

REVISIONS

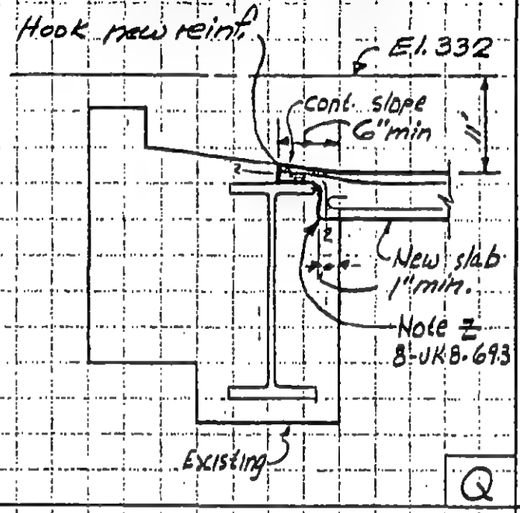

Q

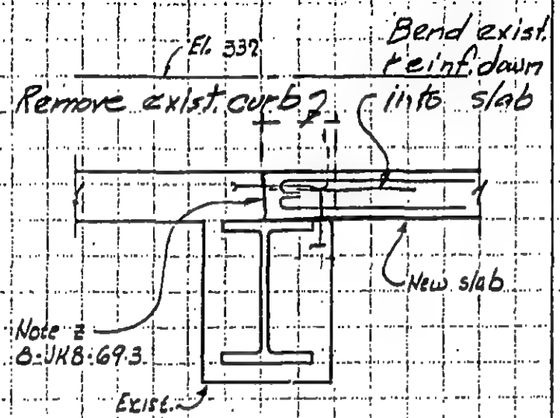

R

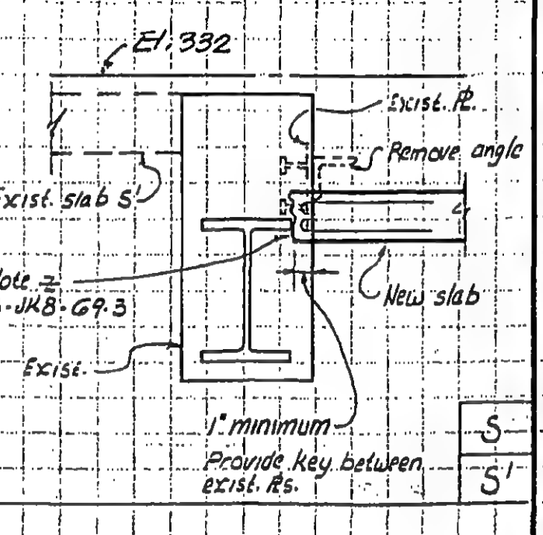

S

S'

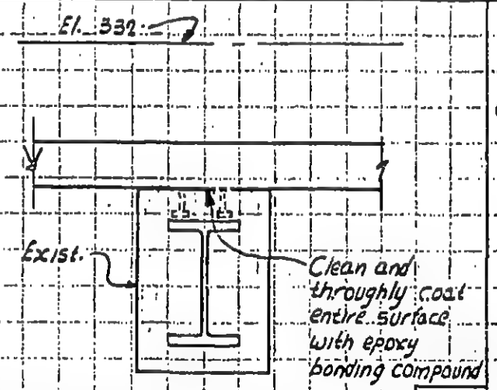

T

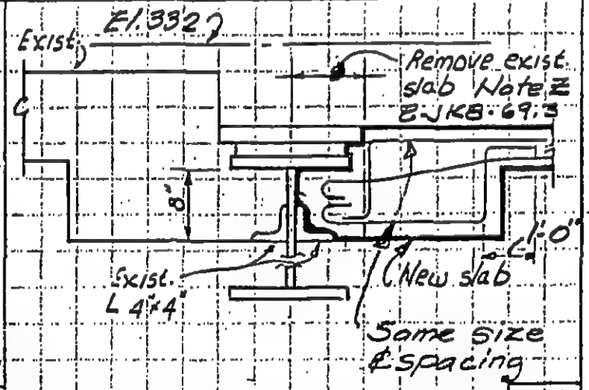

V

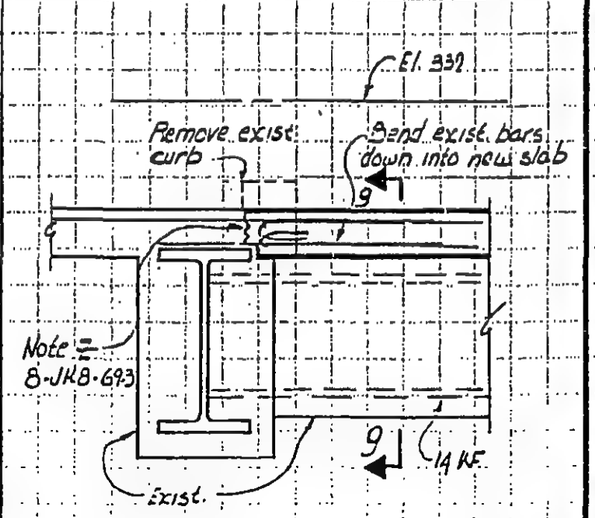

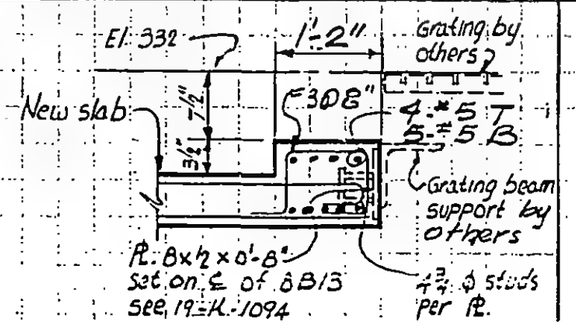

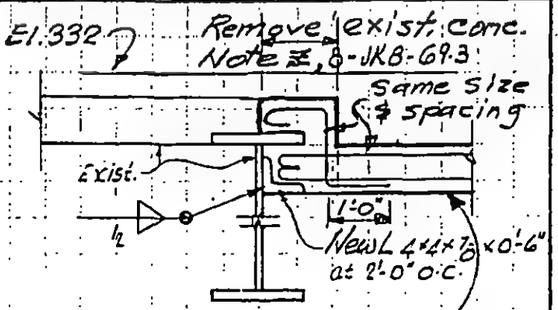

LICENSED PROFESSIONAL ENGINEER
LESLIE E. ROBERTSON
No. 34360
UNIVERSITY OF THE STATE OF NEW YORK

DESIGNED JTM

SKILLING, HELLE, CHRISTIANSEN, ROBERTSON — Structural & Civil Engineers

PROJECT THE WORLD TRADE CENTER | TITLE SECTIONS EL. 332 | DATE 7-27-73

REVISIONS
9-19-73
4-5-74

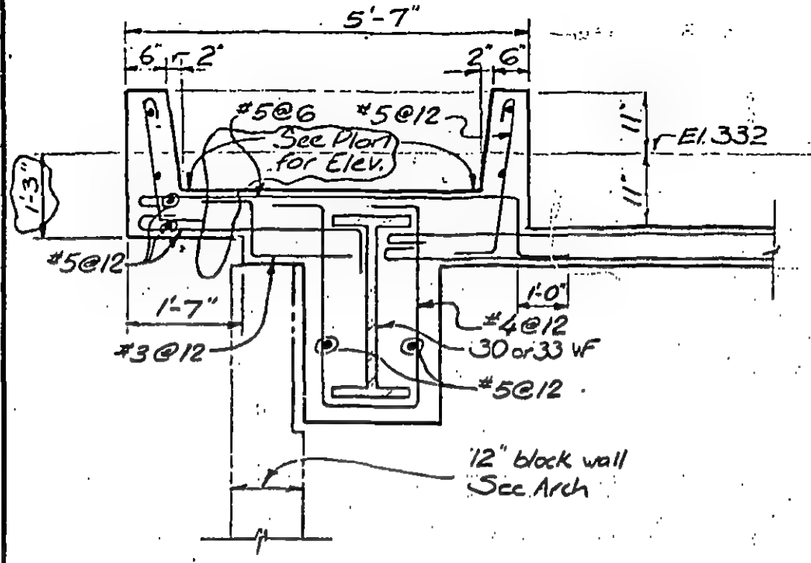

A

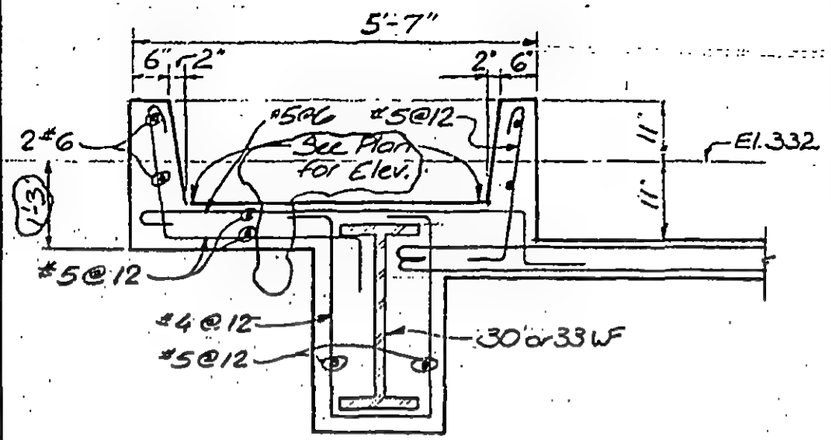

B

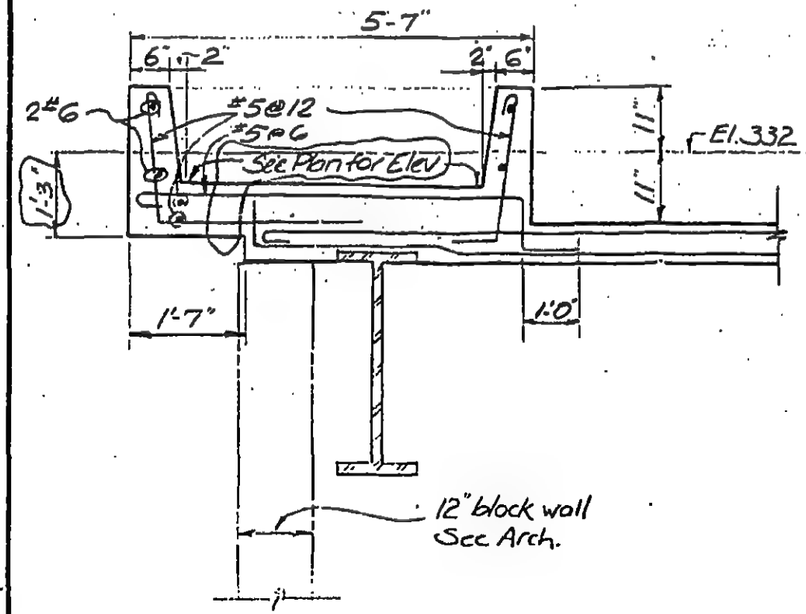

C

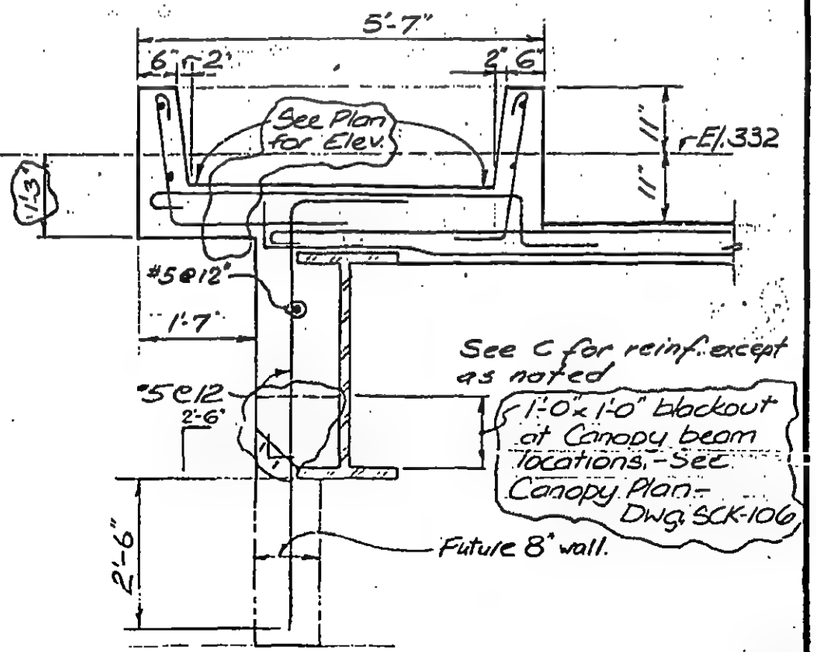

D

LICENSED PROFESSIONAL ENGINEER
LESLIE E. ROBERTSON
No. 34360
UNIVERSITY OF THE STATE OF NEW YORK

DESIGNED WAB
DRAWN J. Banks.
REVIEWED JTM

8-JK8-70

SKILLING, HELLE, CHRISTIANSEN, ROBERTSON — Structural & Civil Engineers

PROJECT THE WORLD TRADE CENTER | TITLE SECTION - EL. 332 | DATE 7-27-73

REVISIONS

9-6-73

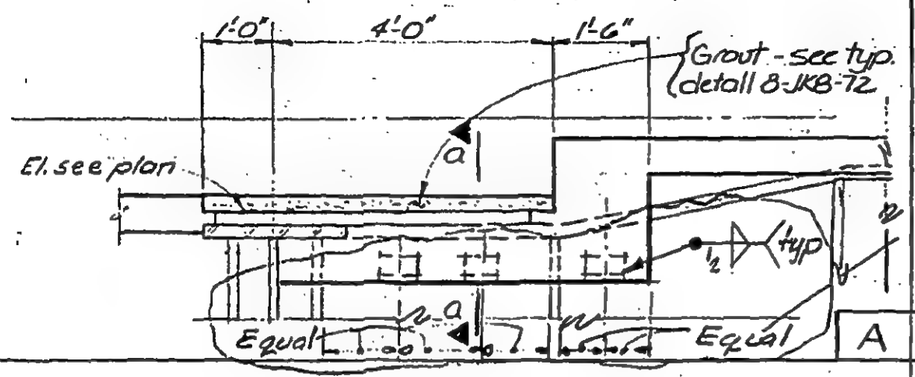

A a

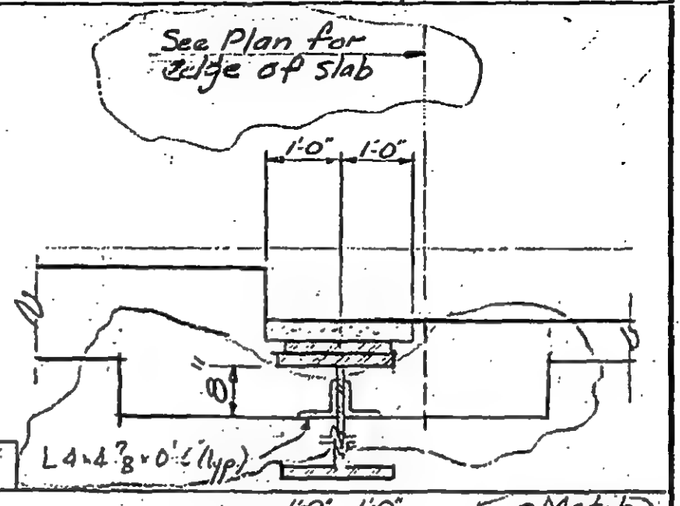

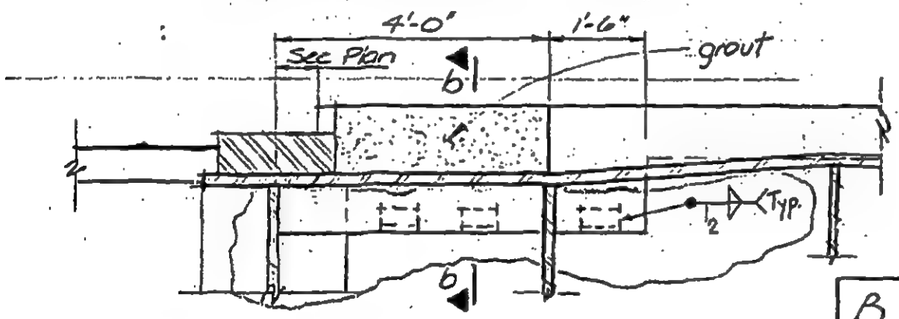

B b

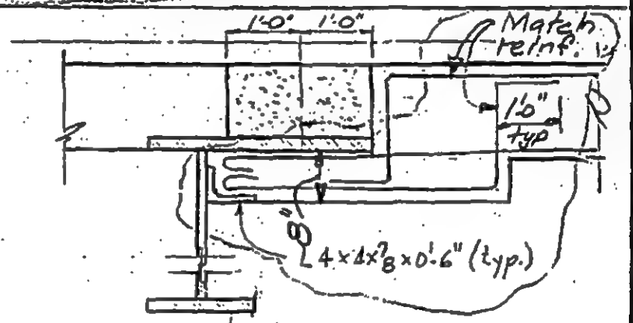

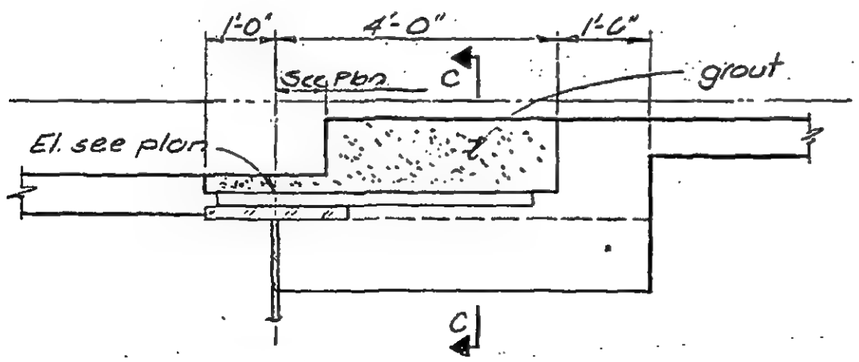

C c

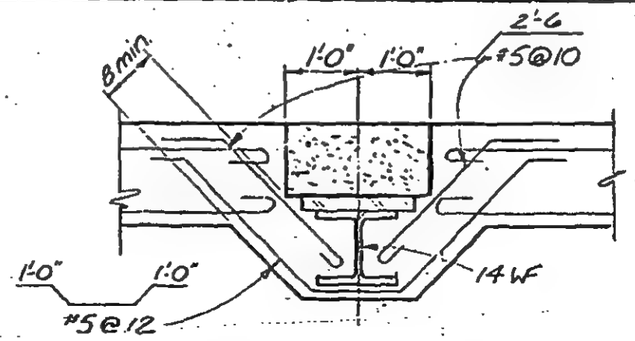

8-JK-8-71.1

LICENSED PROFESSIONAL ENGINEER
LESLIE E. ROBERTSON
No. 34360
UNIVERSITY OF THE STATE OF NEW YORK

DESIGNED WAB

DRAWN TR

REVIEWED JTM

SKILLING, HELLE, CHRISTIANSEN, ROBERTSON — Structural & Civil Engineers

PROJECT: THE WORLD TRADE CENTER | TITLE: SECTIONS EL. 332 | DATE: 7-27-73

REVISIONS

10-11-73

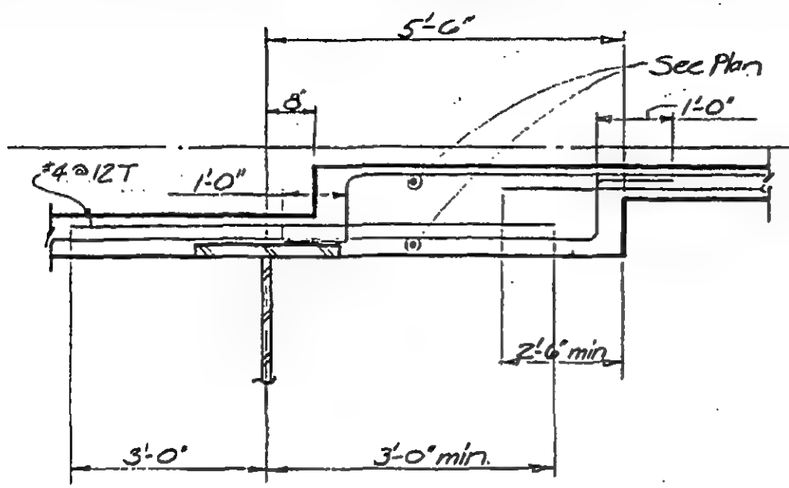

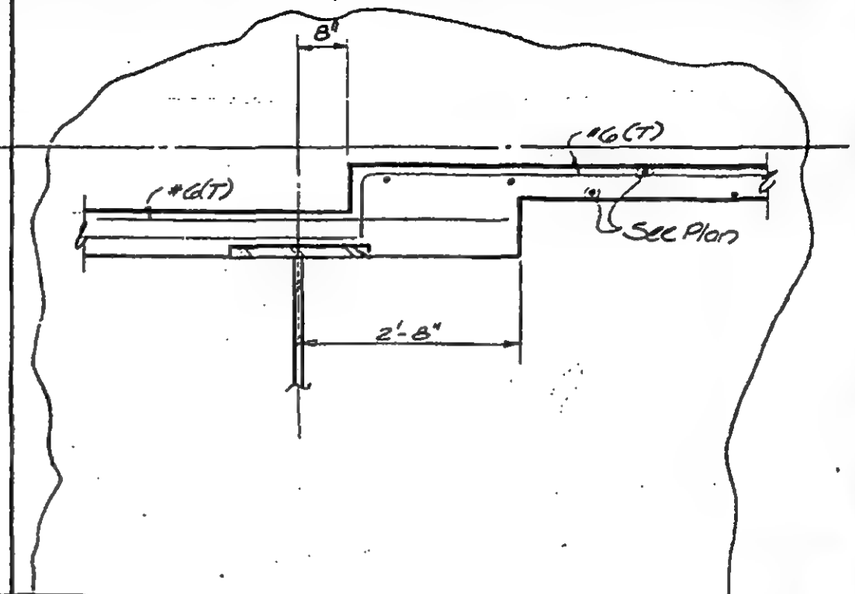

E F

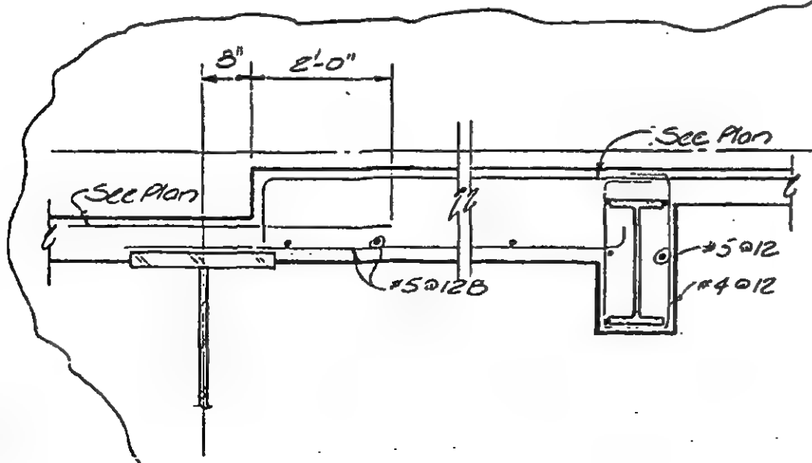

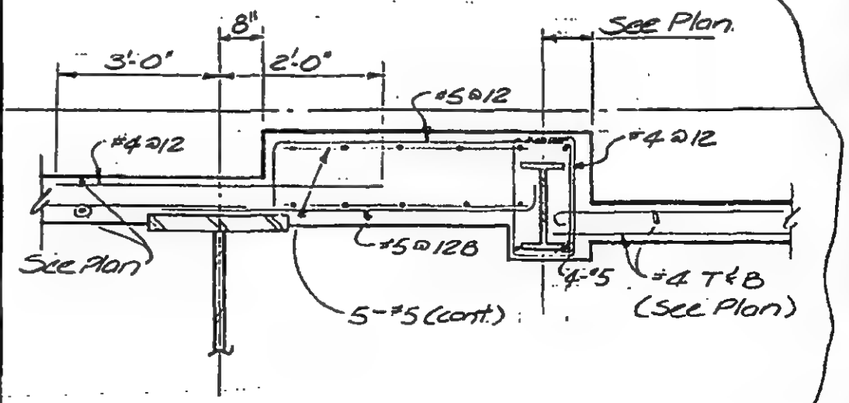

LICENSED PROFESSIONAL ENGINEER
LESLIE E. ROBERTSON
No 34360
UNIVERSITY OF THE STATE OF NEW YORK

DESIGNED WAB

SKILLING, HELLE, CHRISTIANSEN, ROBERTSON — Structural & Civil Engineers

PROJECT THE WORLD TRADE CENTER | TITLE SECTIONS - EL. 332 | DATE 10-11-73

REVISIONS

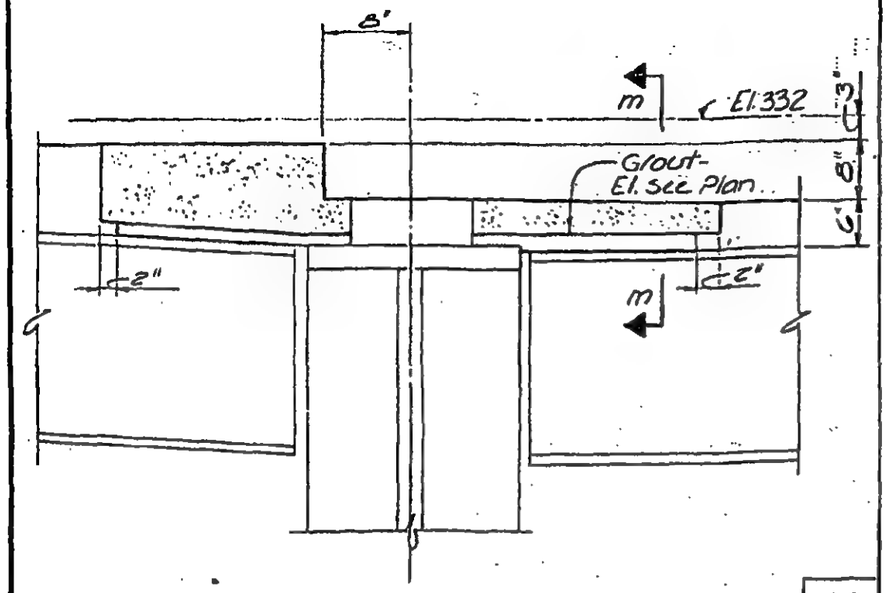

M

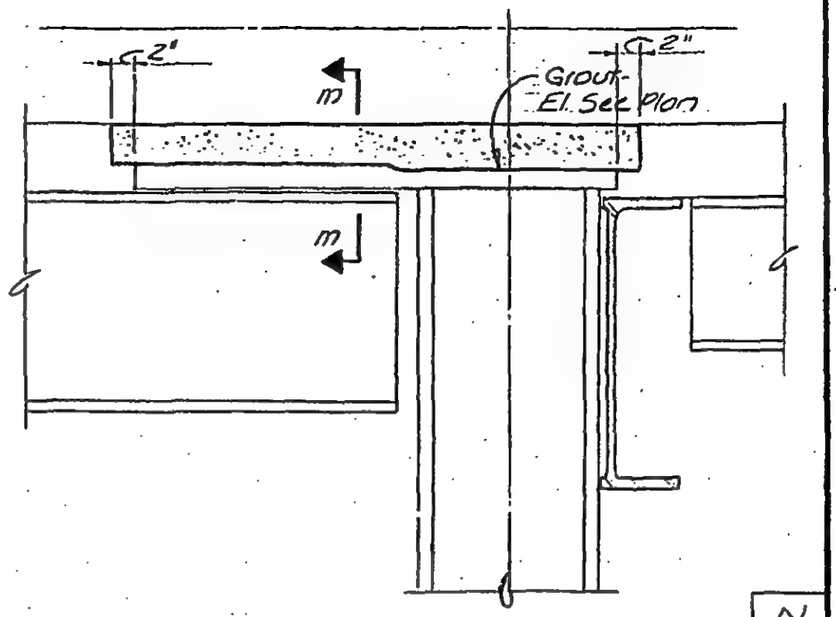

N

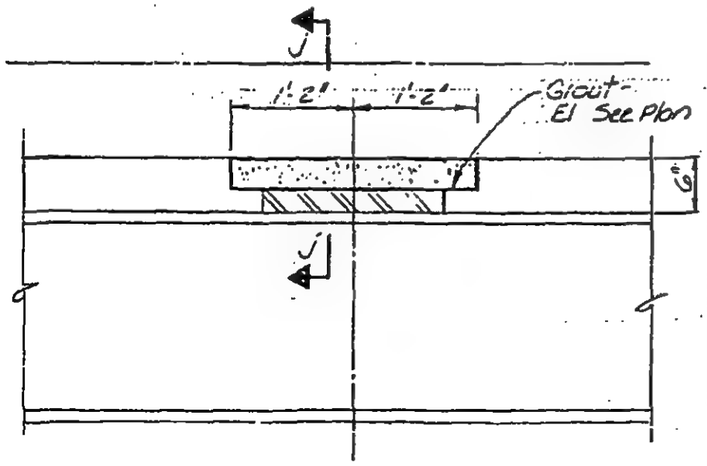

K
J

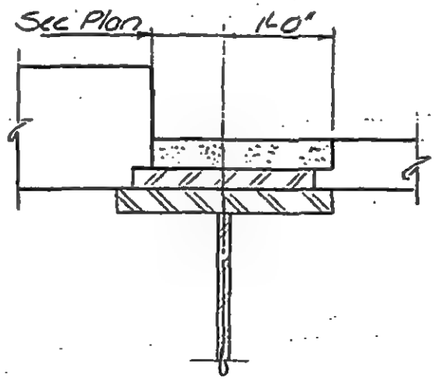

j

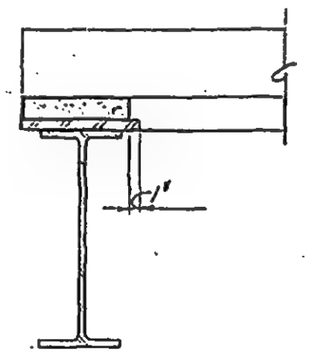

m

Note : For typical grout detail, see 8-JKB-72.1

8-JKB-71.3

LICENSED PROFESSIONAL ENGINEER
LESLIE E. ROBERTSON
No. 34360
UNIVERSITY OF THE STATE OF NEW YORK

DESIGNED K.C.
DRAWN J.B.
REVIEWED

SKILLING, HELLE, CHRISTIANSEN, ROBERTSON — Structural & Civil Engineers

PROJECT THE WORLD TRADE CENTER | TITLE SECTIONS - EL. 332 | DATE 4-1-74

REVISIONS

4-5-74

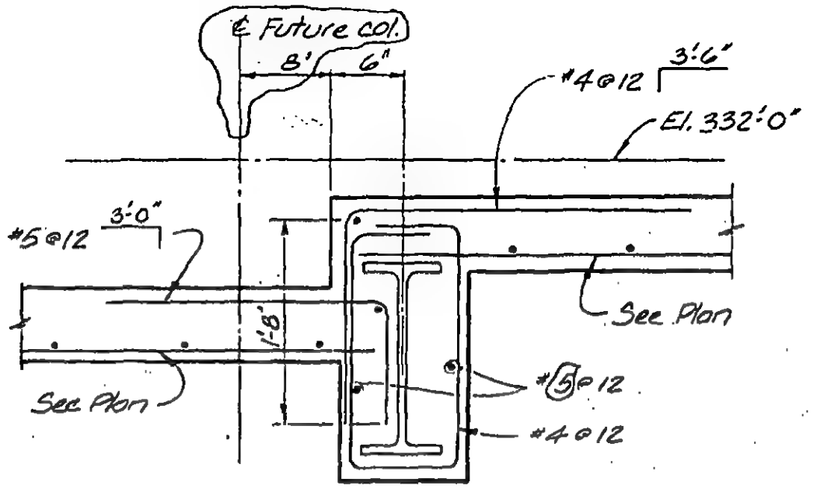

Q

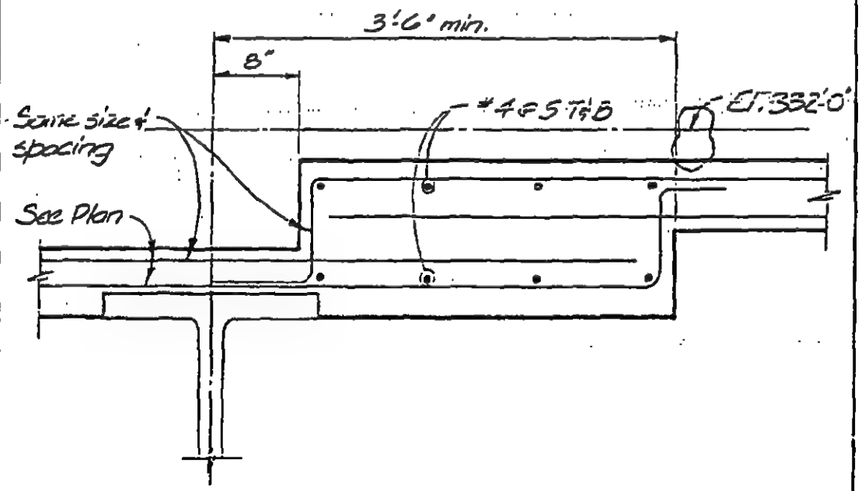

LICENSED PROFESSIONAL ENGINEER
LESLIE E. ROBERTSON
No. 34940
UNIVERSITY OF THE STATE OF NEW YORK

DESIGNED J.T.M., W.A.B.

DRAWN J.B

REVIEWED J.T.M.

R

B-JKB-71.4

SKILLING, HELLE, CHRISTIANSEN, ROBERTSON — Structural & Civil Engineers

PROJECT THE WORLD TRADE CENTER | TITLE SECTIONS - EL.332 | DATE 7-27-73

REVISIONS

10-11-73

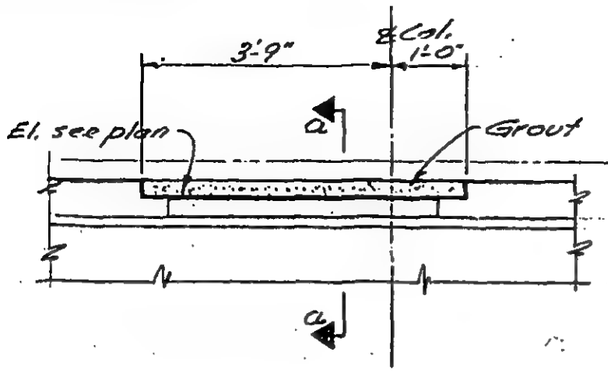

A a

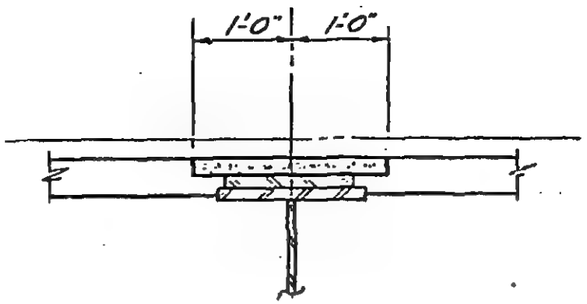

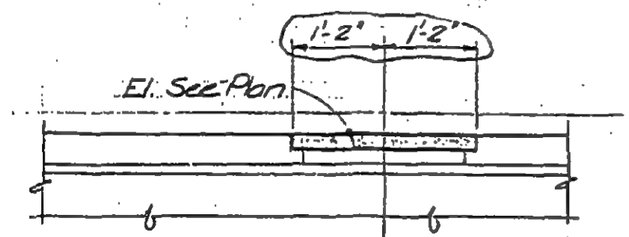

B

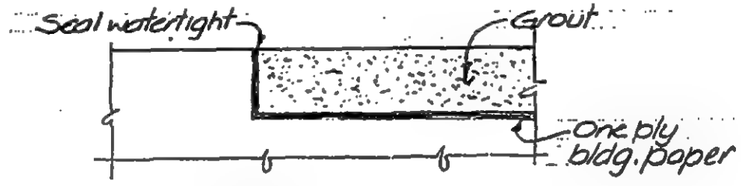

Note: Install this detail when instructed by the Engineer
Typical of Grout 8-JK8-71 & 72

TYPICAL GROUT DETAIL

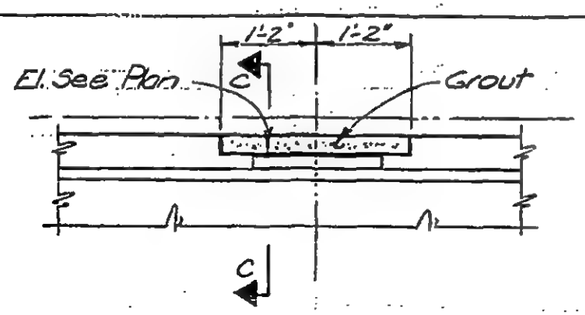

E

C c

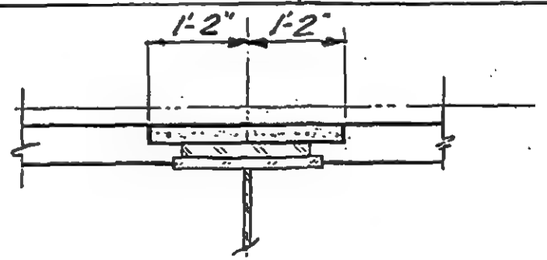

8-JK8-72.1

LICENSED PROFESSIONAL ENGINEER
LESLIE E. ROBERTSON
No. 34360
UNIVERSITY OF THE STATE OF NEW YORK

DESIGNED WAB

DRAWN TR

REVIEWED JTM

SKILLING, HELLE, CHRISTIANSEN, ROBERTSON — Structural & Civil Engineers

PROJECT THE WORLD TRADE CENTER | TITLE SECTIONS - EL. 332 | DATE 10-11-73

REVISIONS

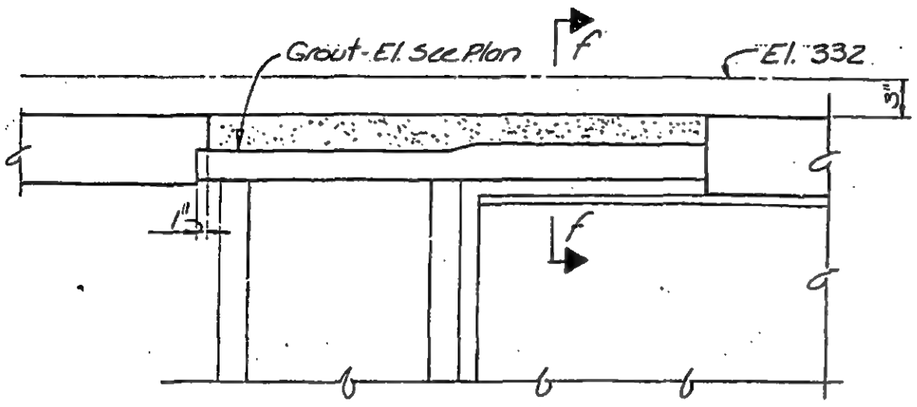

F f

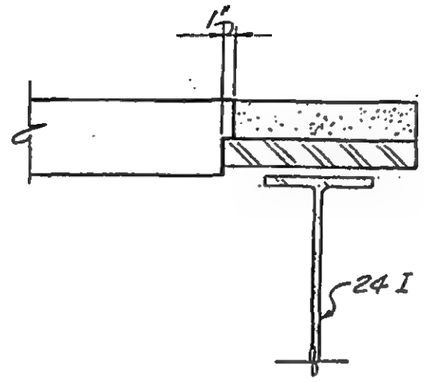

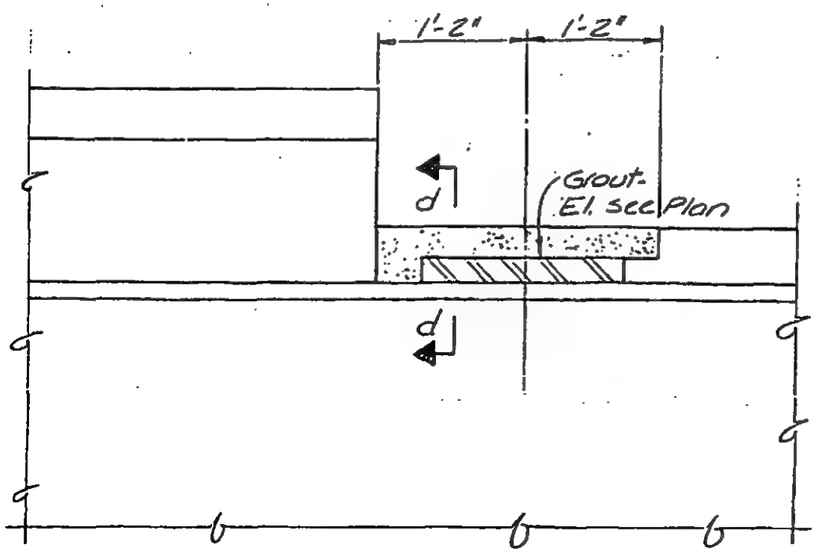

D d

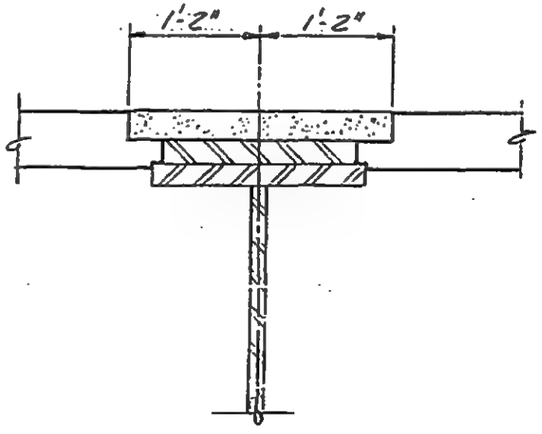

8-JKB-72.2

LICENSED PROFESSIONAL ENGINEER
LESLIE E. ROBERTSON
No 34360
UNIVERSITY OF THE STATE OF NEW YORK

DESIGNED K.C.
DRAWN J.B.
REVIEWED

SKILLING, HELLE, CHRISTIANSEN, ROBERTSON — Structural & Civil Engineers

PROJECT	TITLE	DATE
THE WORLD TRADE CENTER	SECTIONS - EL. 332	4-5-74

REVISIONS

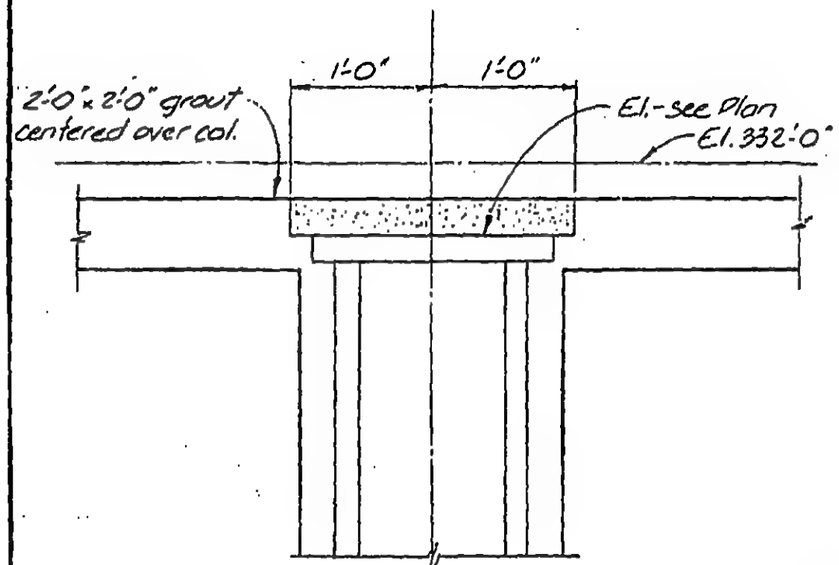

G

LICENSED PROFESSIONAL ENGINEER
LESLIE E. ROBERTSON
No. 34360
UNIVERSITY OF THE STATE OF NEW YORK

DESIGNED J.T.M.
DRAWN J.B.
REVIEWED

SKILLING, HELLE, CHRISTIANSEN, ROBERTSON — Structural & Civil Engineers

PROJECT: THE WORLD TRADE CENTER | TITLE: SECTIONS - EL. 332 | DATE: 11-17-72

REVISIONS

10-11-73
Gen Rev.

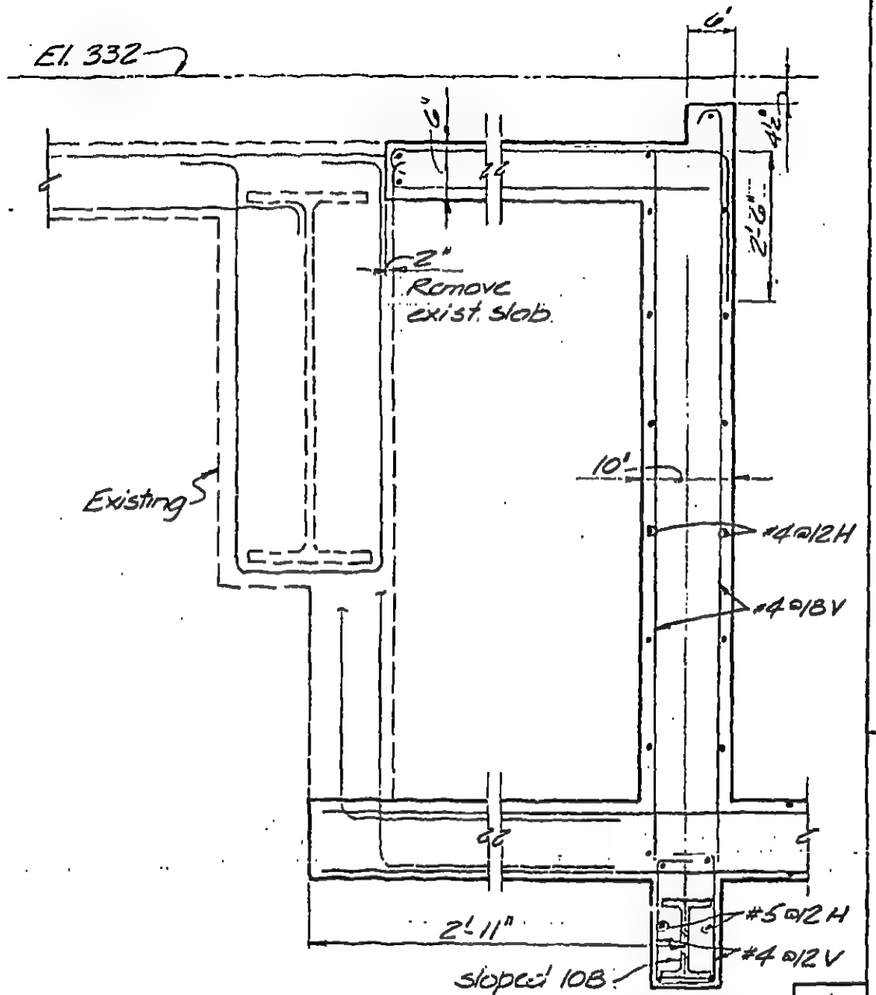

A

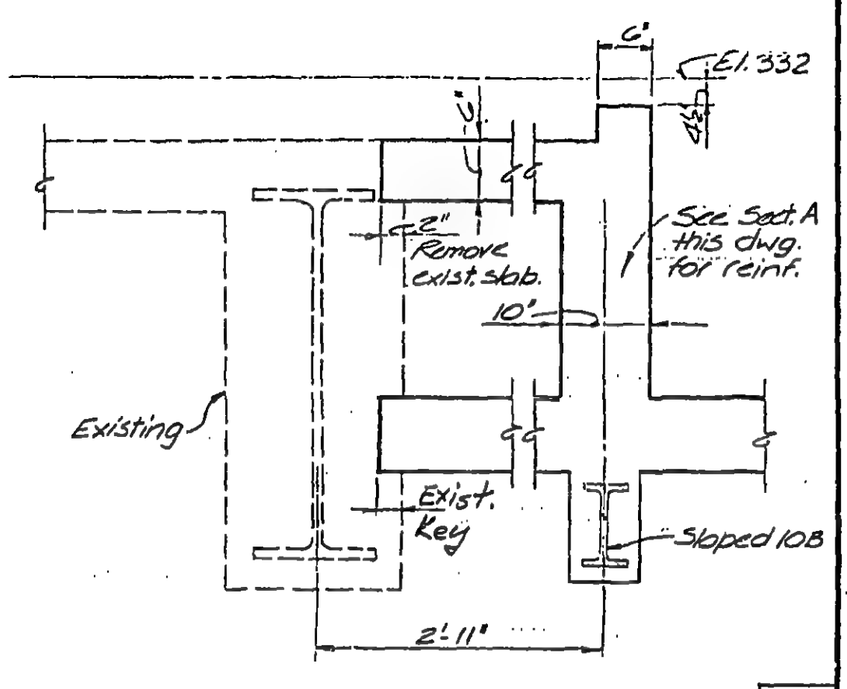

B

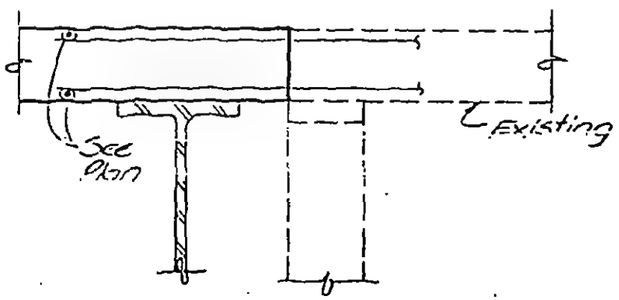

C

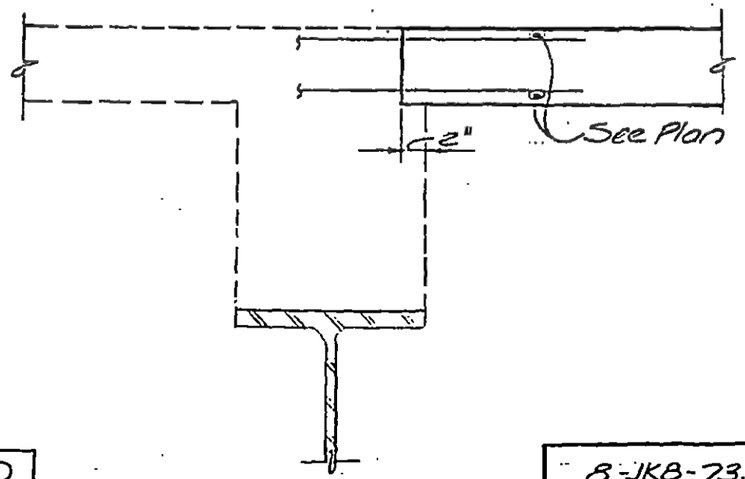

D

LICENSED PROFESSIONAL ENGINEER
LESLIE E. ROBERTSON
No 34360
UNIVERSITY OF THE STATE OF NEW YORK

DESIGNED WoD
DRAWN J.B.
REVIEWED

8-JKB-73.1

SKILLING, HELLE, CHRISTIANSEN, ROBERTSON — Structural & Civil Engineers

PROJECT: THE WORLD TRADE CENTER | TITLE: SECTIONS - EL. 332 | DATE: 10-11-73

REVISIONS

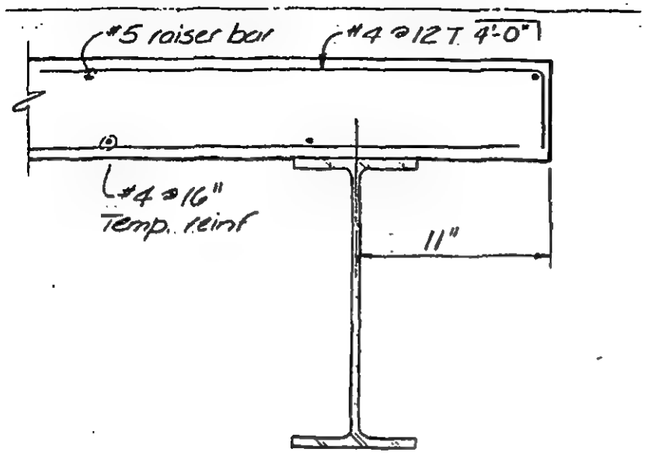

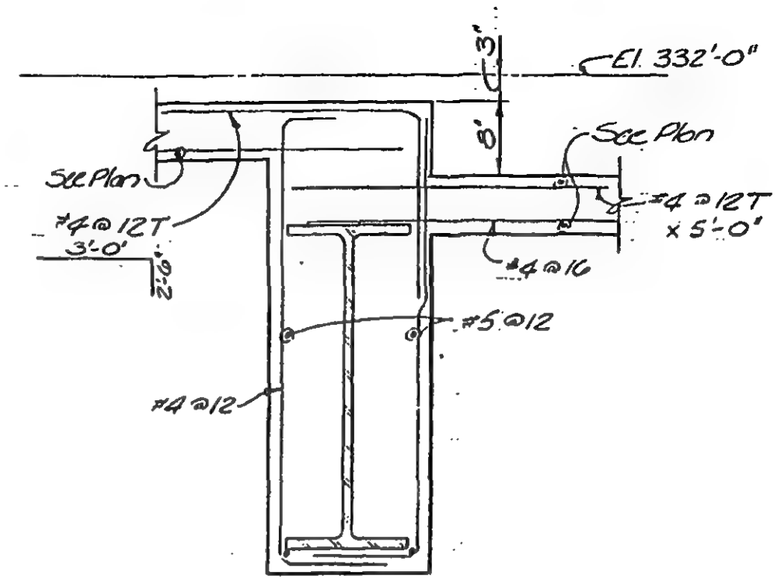

E | F

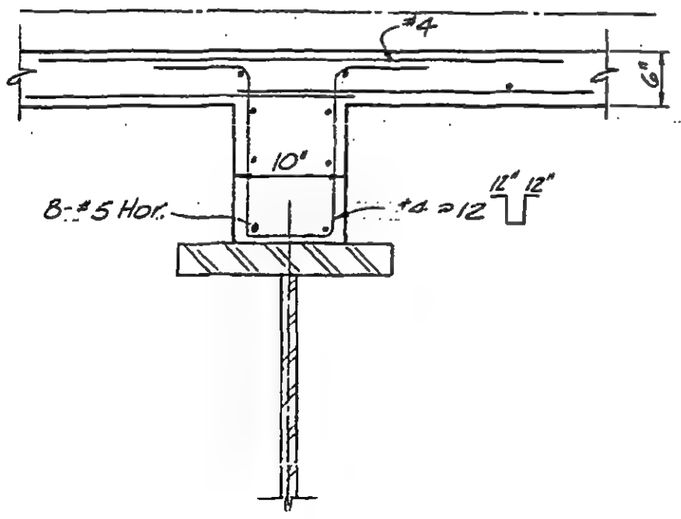

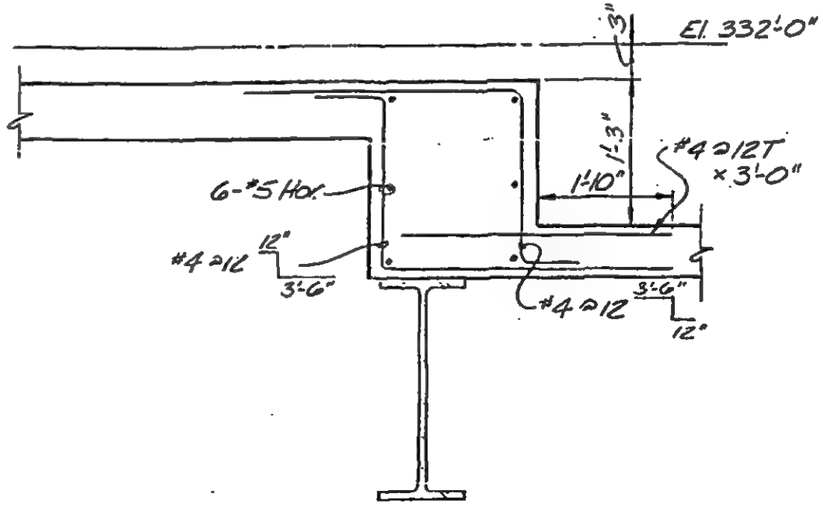

G | H

8-JK8-73.2

LICENSED PROFESSIONAL ENGINEER — LESLIE E. ROBERTSON — No. 34360 — UNIVERSITY OF THE STATE OF NEW YORK

DESIGNED K. C.

DRAWN J.B.

REVISED

SKILLING, HELLE, CHRISTIANSEN, ROBERTSON — Structural & Civil Engineers

PROJECT: THE WORLD TRADE CENTER | TITLE: SECTIONS - EL. 332 | DATE: 10-11-73

REVISIONS

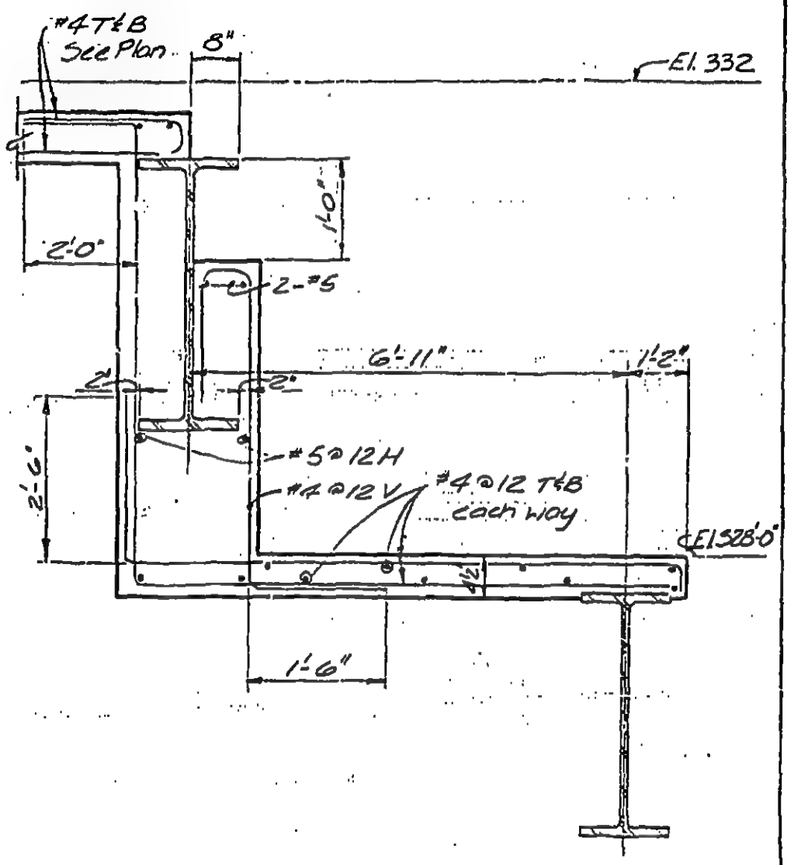

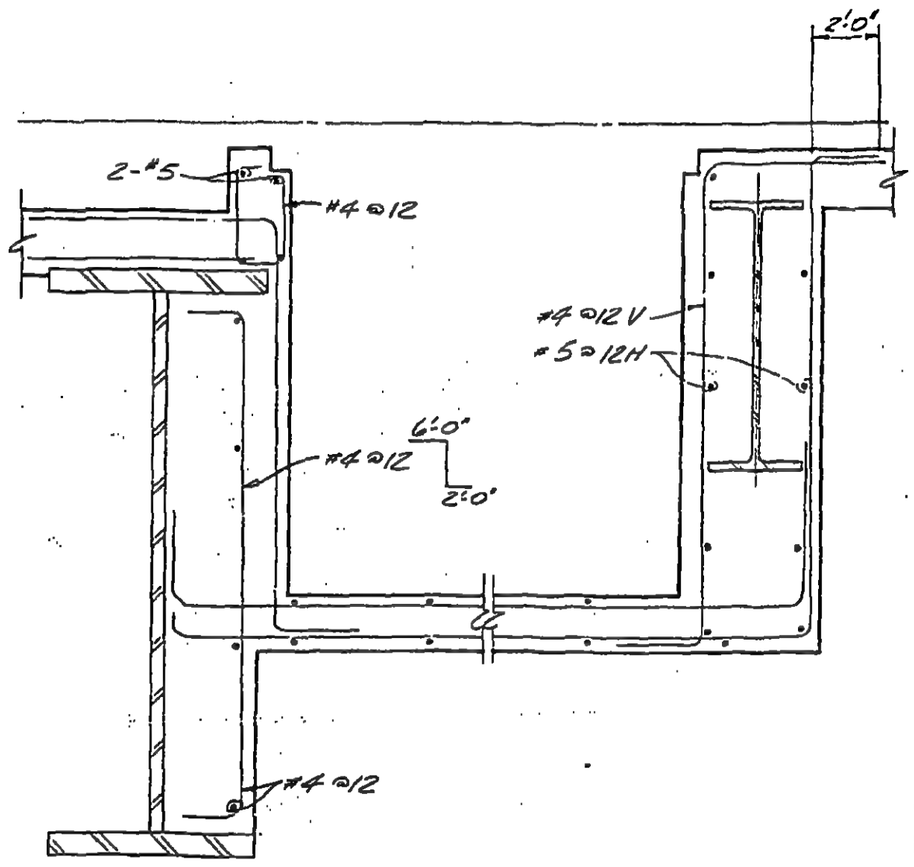

LICENSED PROFESSIONAL ENGINEER — LESLIE E. ROBERTSON — No. 34960 — UNIVERSITY OF THE STATE OF NEW YORK

DESIGNED: K.C.
DRAWN: J.B.
REVIEWED:

J | K

6-JK6-73.3

SKILLING, HELLE, CHRISTIANSEN, ROBERTSON — Structural & Civil Engineers

PROJECT: THE WORLD TRADE CENTER | TITLE: SECTIONS - EL 332 | DATE: 10-11-73

REVISIONS

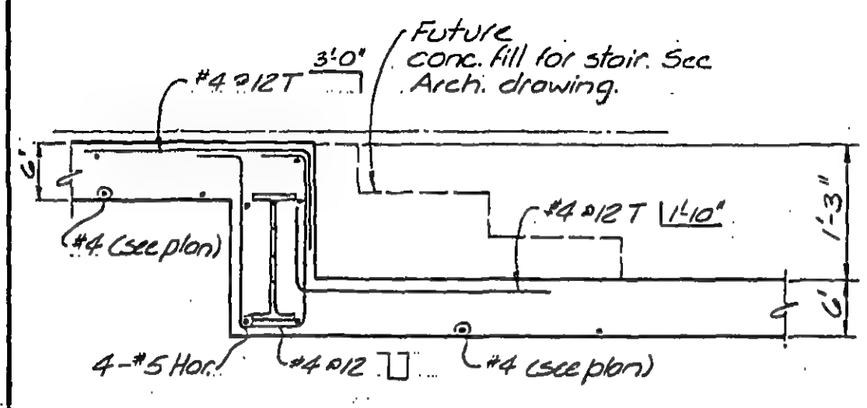

M

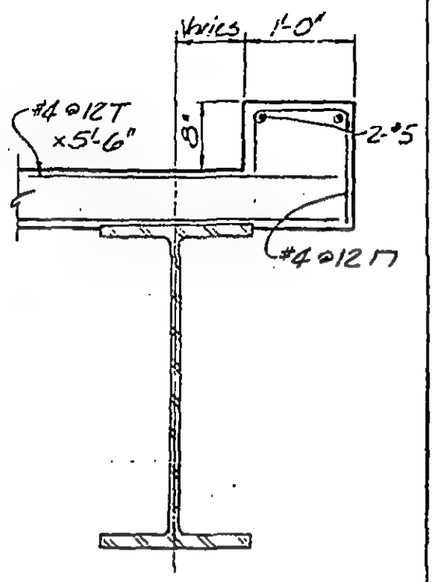

P

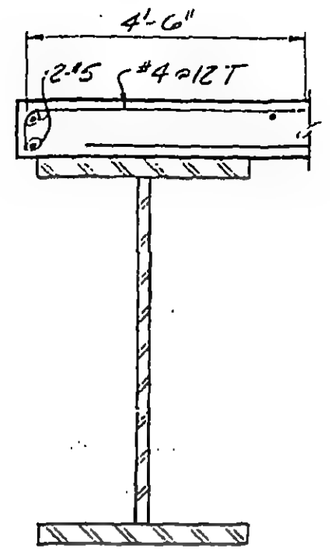

Q

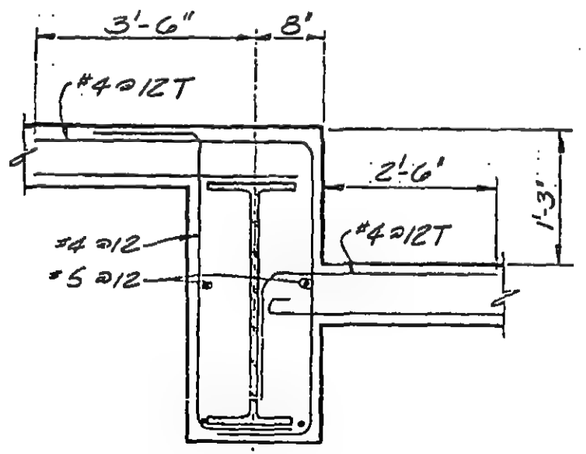

N

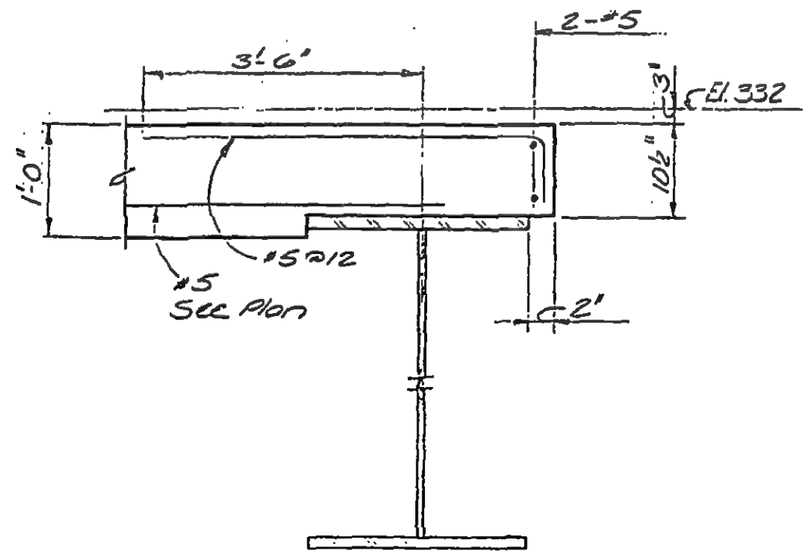

R

LICENSED PROFESSIONAL ENGINEER LESLIE E. ROBERTSON No 34360 UNIVERSITY OF THE STATE OF NEW YORK

DESIGNED K.C.

DRAWN J.B.

REVIEWED

8-JKB-73.4

SKILLING, HELLE, CHRISTIANSEN, ROBERTSON — Structural & Civil Engineers

PROJECT: THE WORLD TRADE CENTER | TITLE: SECTIONS AT AUTO LIFT - EL. 284'-0" | DATE: 1-12-73

REVISIONS

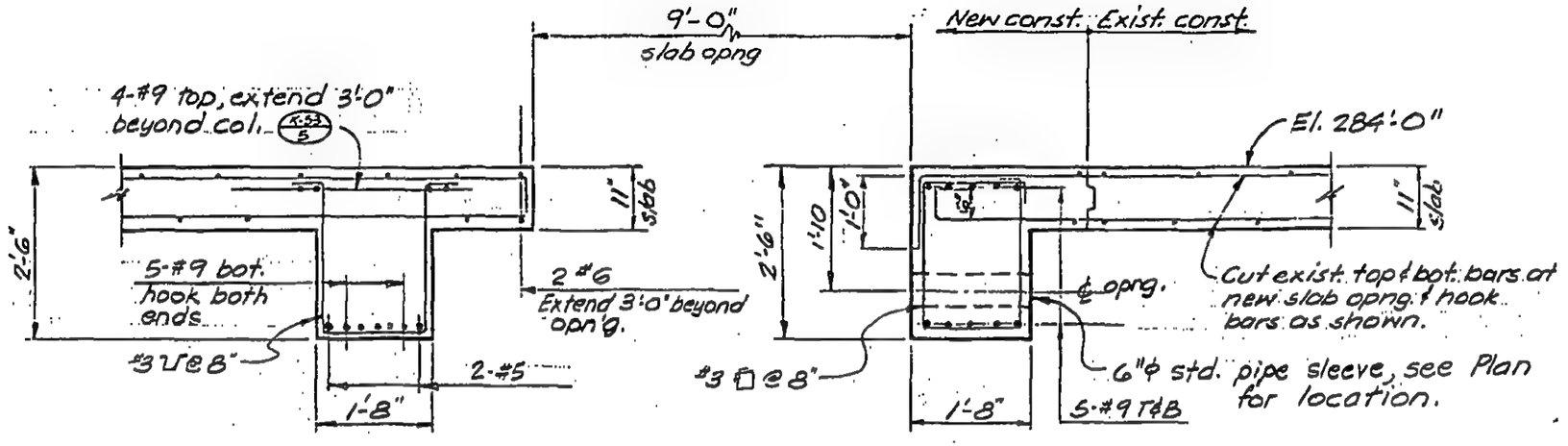

A

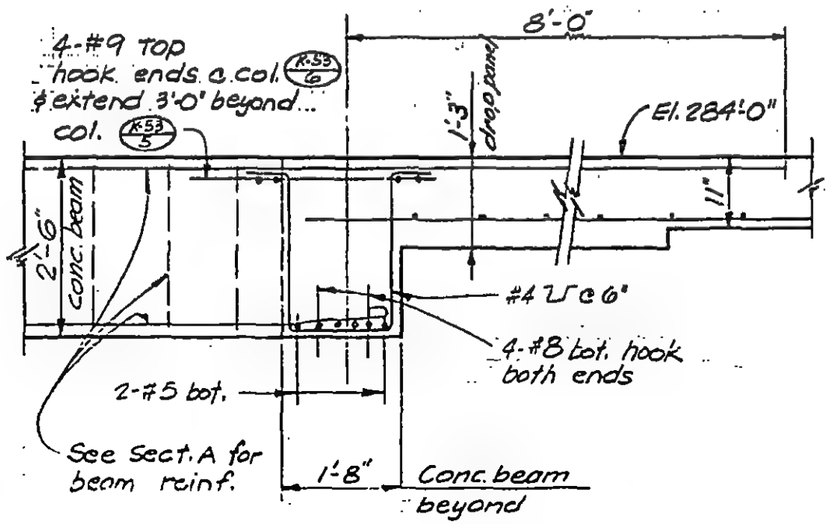

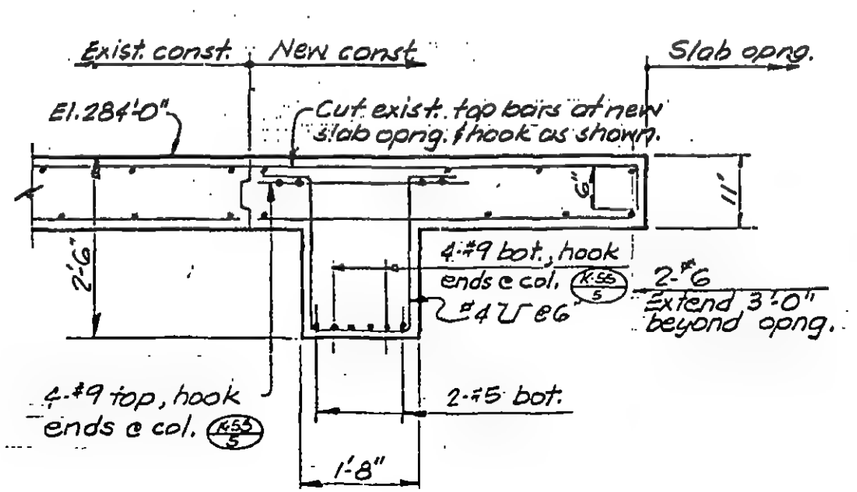

B C

LICENSED PROFESSIONAL ENGINEER — LESLIE E. ROBERTSON — No 34360 — UNIVERSITY OF THE STATE OF NEW YORK

DESIGNED D.S.

DRAWN T.R.

REVIEWED

8-JK8-75.1

SKILLING, HELLE, CHRISTIANSEN, ROBERTSON — Structural & Civil Engineers

PROJECT THE WORLD TRADE CENTER | TITLE SECTIONS AT AUTO LIFT - EL. 284'-0" | DATE 1-12-73

REVISIONS

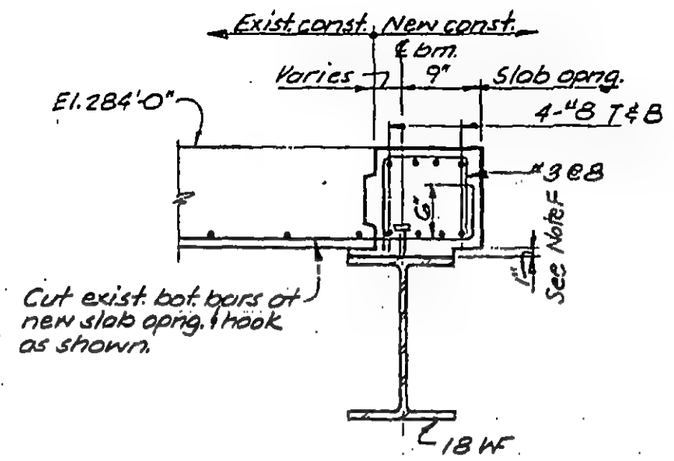

D

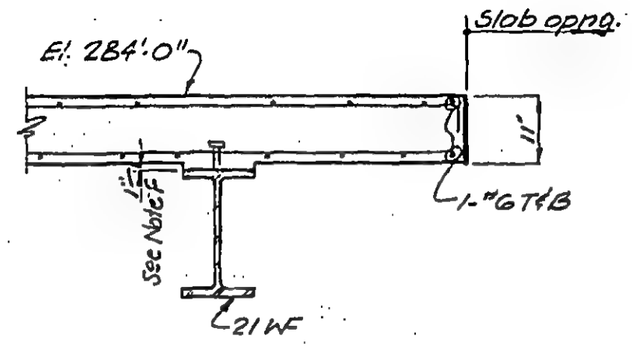

E

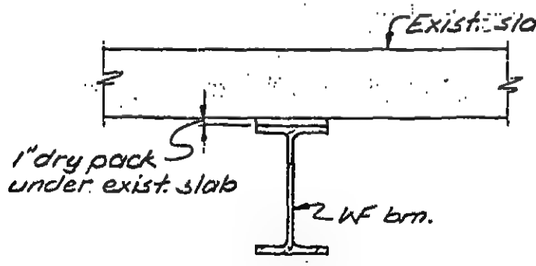

Alternate Detail If Steel Beams Are Installed After Concrete Slab Is In Place

Note F:
If this method is used for const., slab must be kept shored adequately along locations of future WF beams

F

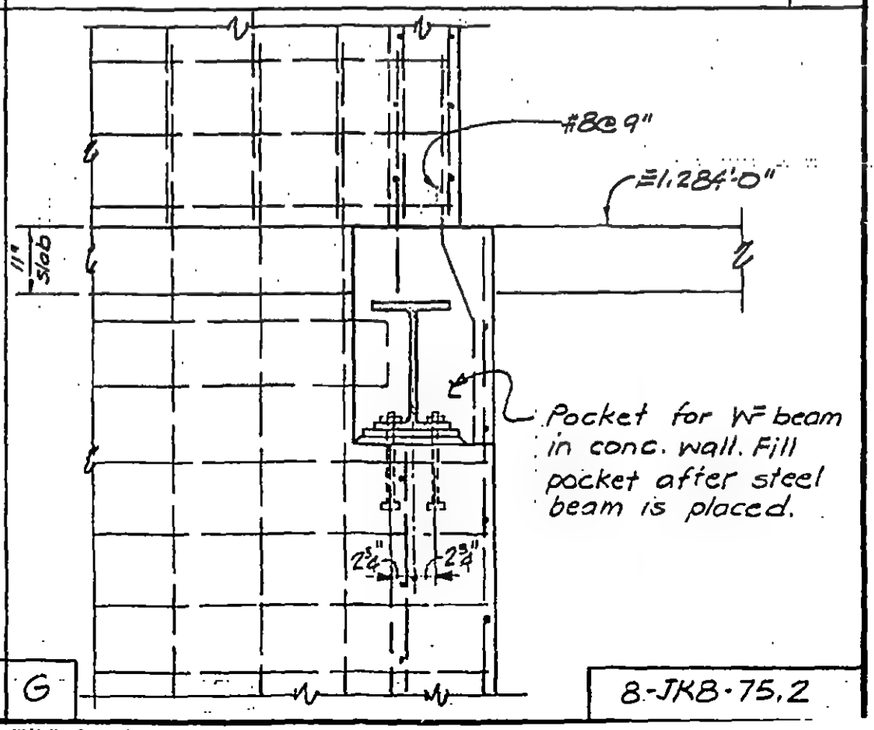

G

LICENSED PROFESSIONAL ENGINEER — LESLIE E. ROBERTSON — No 34360 — UNIVERSITY OF THE STATE OF NEW YORK

DESIGNED D.S.
DRAWN T.R.
REVIEWED

8-JKB-75.2

SKILLING, HELLE, CHRISTIANSEN, ROBERTSON — Structural & Civil Engineers

PROJECT: THE WORLD TRADE CENTER | TITLE: SECTIONS AT AUTO LIFT - EL. 284'-0" | DATE: 1-12-73

REVISIONS

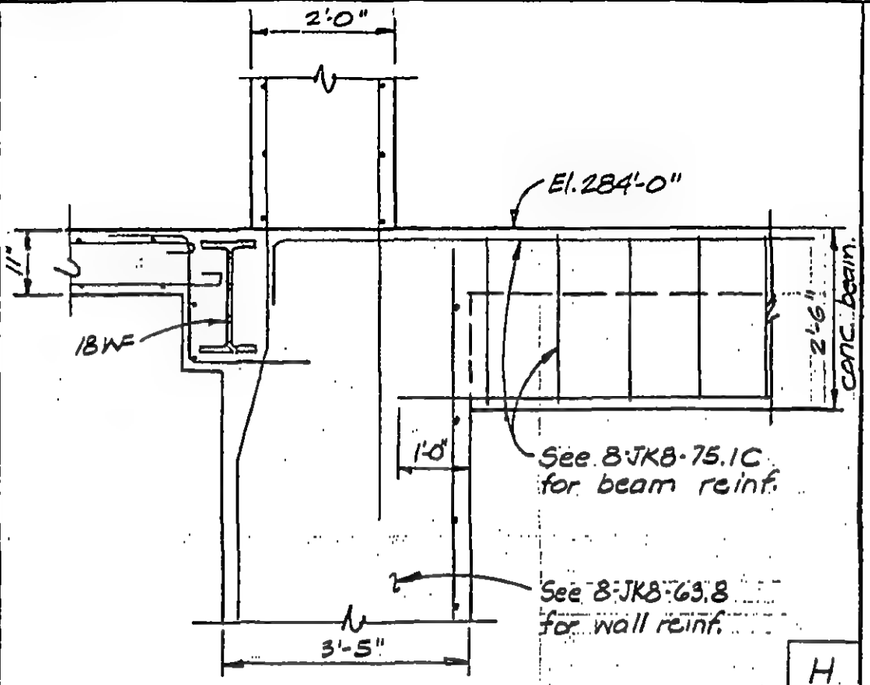

H

LICENSED PROFESSIONAL ENGINEER
LESLIE E. ROBERTSON
No 34360
UNIVERSITY OF THE STATE OF NEW YORK

DESIGNED D. S.

DRAWN

REVIEWED

8-JK8-753

SKILLING, HELLE, CHRISTIANSEN, ROBERTSON — Structural & Civil Engineers

PROJECT: THE WORLD TRADE CENTER | TITLE: SLAB SECTIONS AT ESCALATOR - EL. 294'-0" | DATE: 3-15-73

REVISIONS

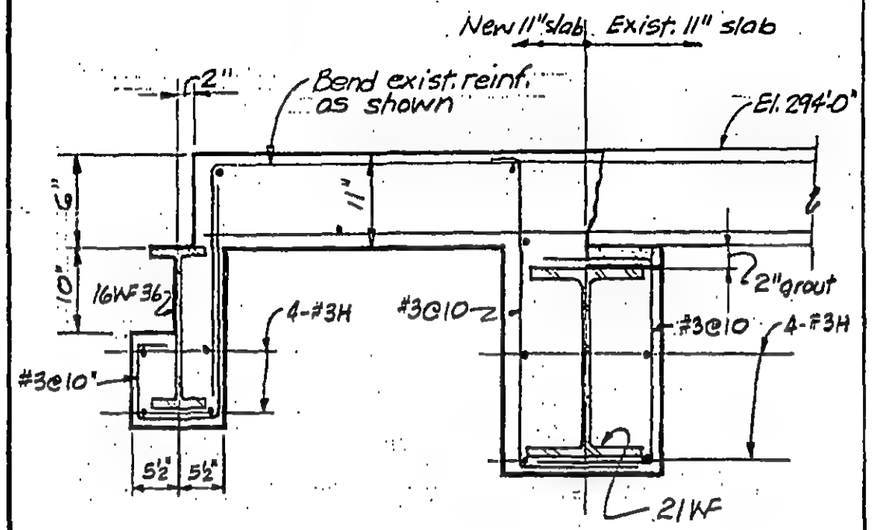

A

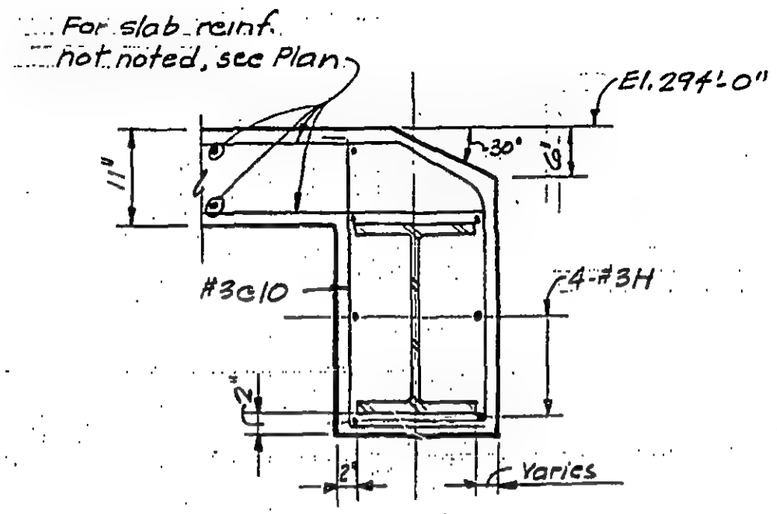

B

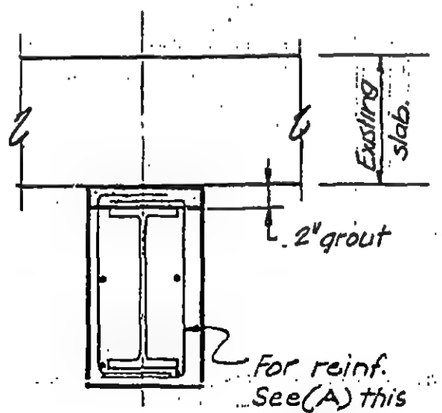

C

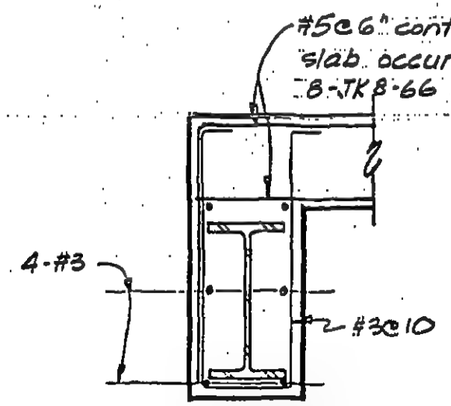

D

Note: Grout (dry pack) between existing slab and steel beam. Grout to be f'c = 5000 psi

B-JK8-80

LICENSED PROFESSIONAL ENGINEER — LESLIE E. ROBERTSON — NO 34360 — UNIVERSITY OF THE STATE OF NEW YORK

DESIGNED K.C.

DRAWN

REVIEWED

SKILLING, HELLE, CHRISTIANSEN, ROBERTSON — Structural & Civil Engineers

PROJECT: THE WORLD TRADE CENTER | TITLE: SECTION AT STAIR K-8 EL 310 | DATE: 6-15-73

REVISIONS

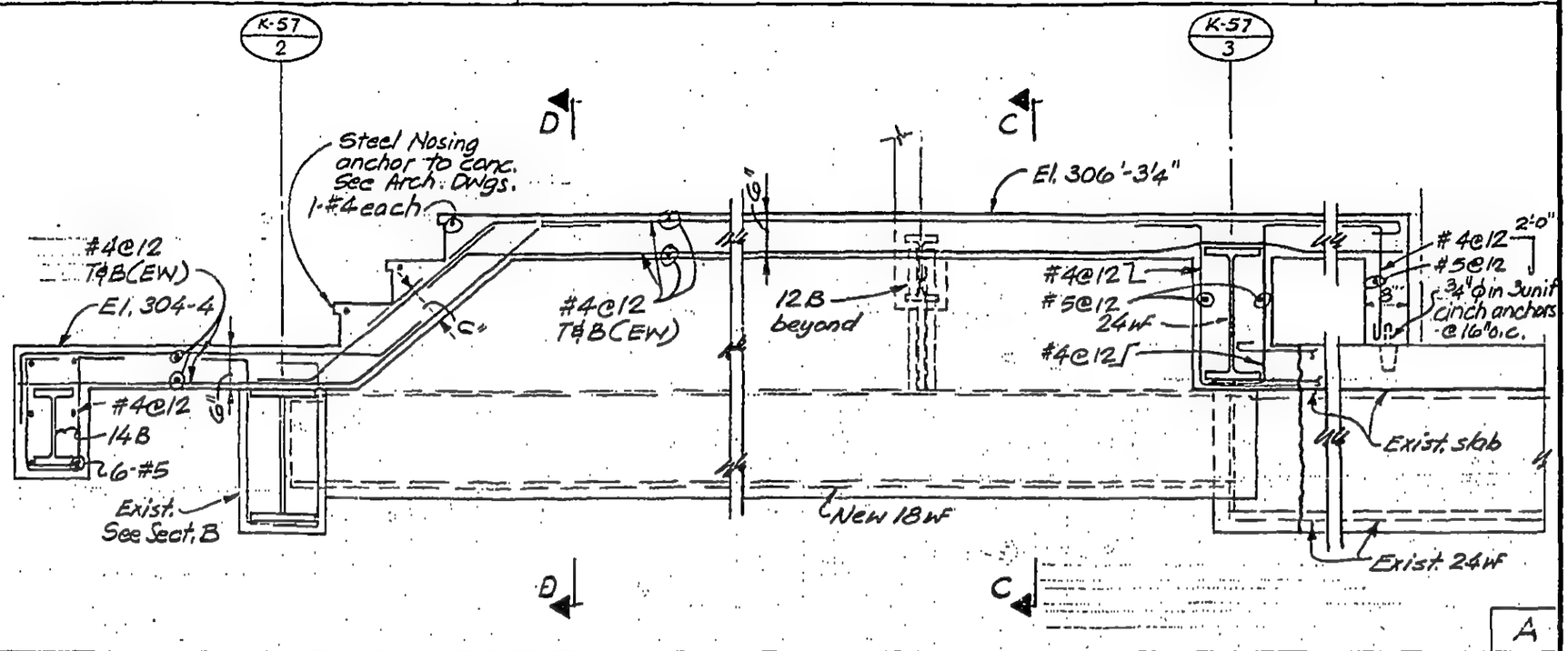

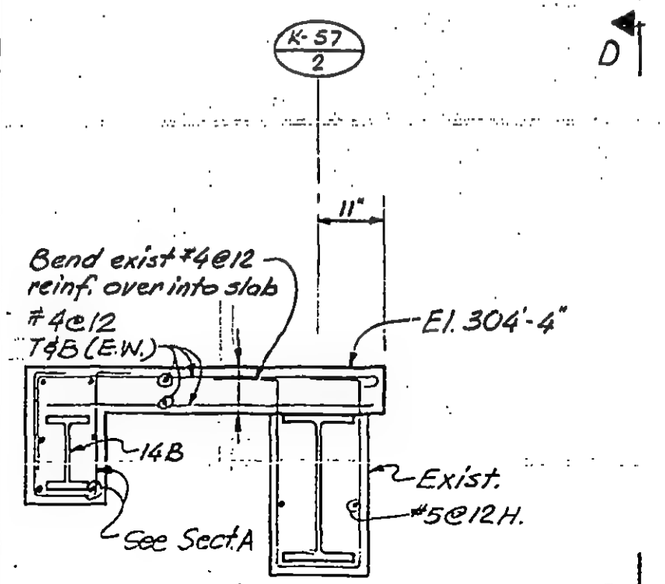

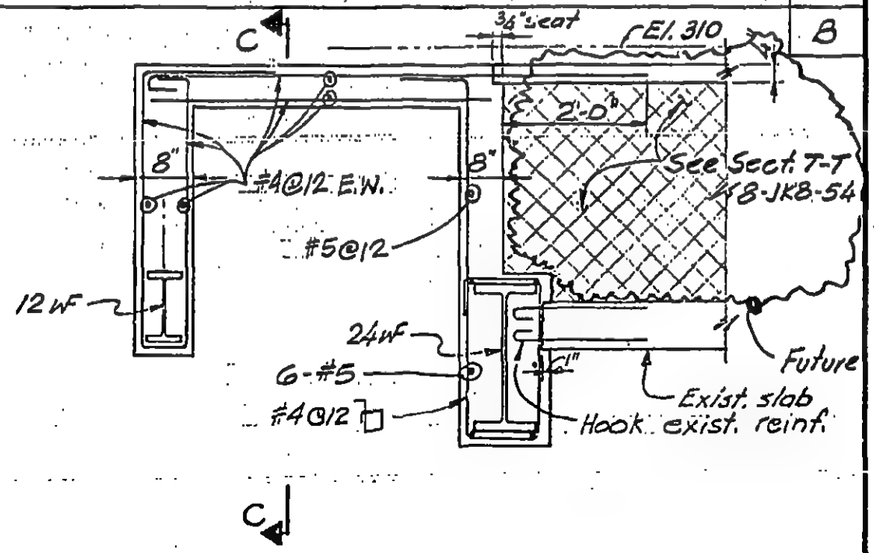

A
B

LICENSED PROFESSIONAL ENGINEER — LESLIE E. ROBERTSON — No. 34360 — UNIVERSITY OF THE STATE OF NEW YORK

DESIGNED

DRAWN JG

REVIEWED WAB

8-JKB-81.1

SKILLING, HELLE, CHRISTIANSEN, ROBERTSON — Structural & Civil Engineers

PROJECT: THE WORLD TRADE CENTER

TITLE: SECTION AT STAIR K-8 EL -310

DATE: 6-15-73

REVISIONS

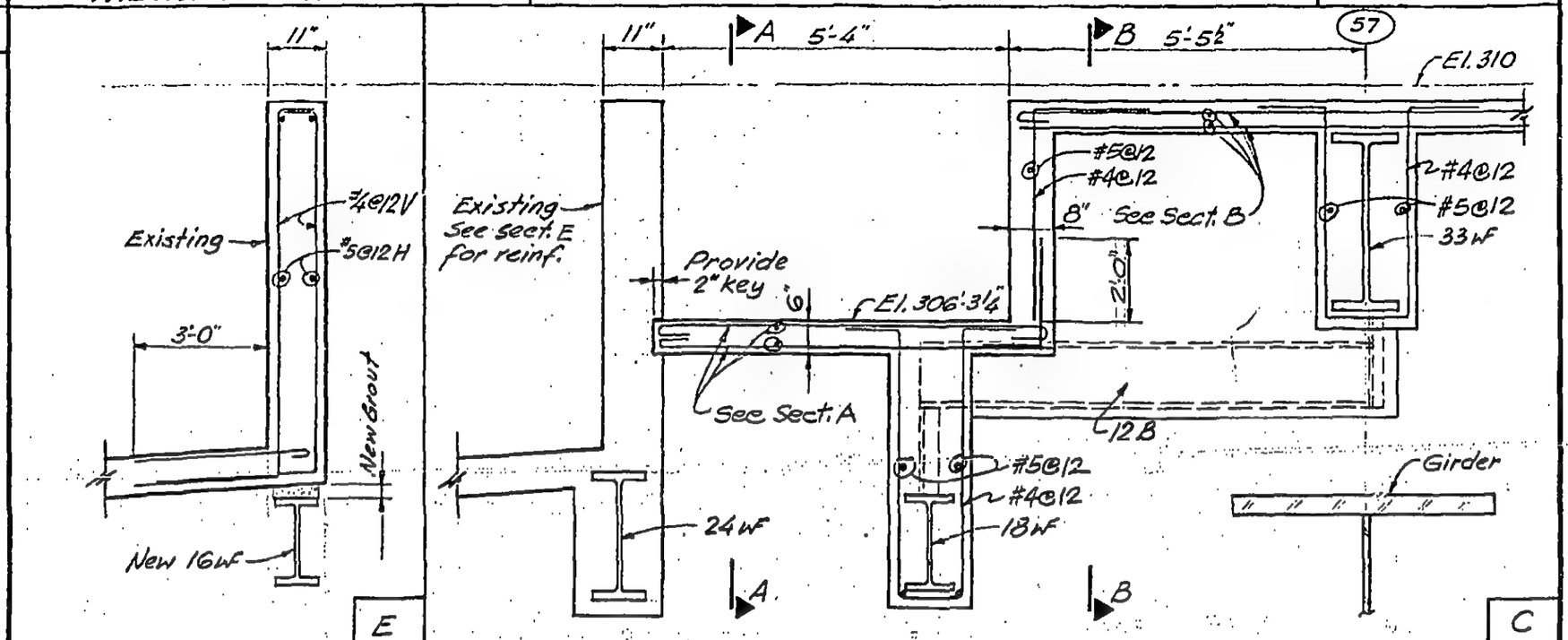

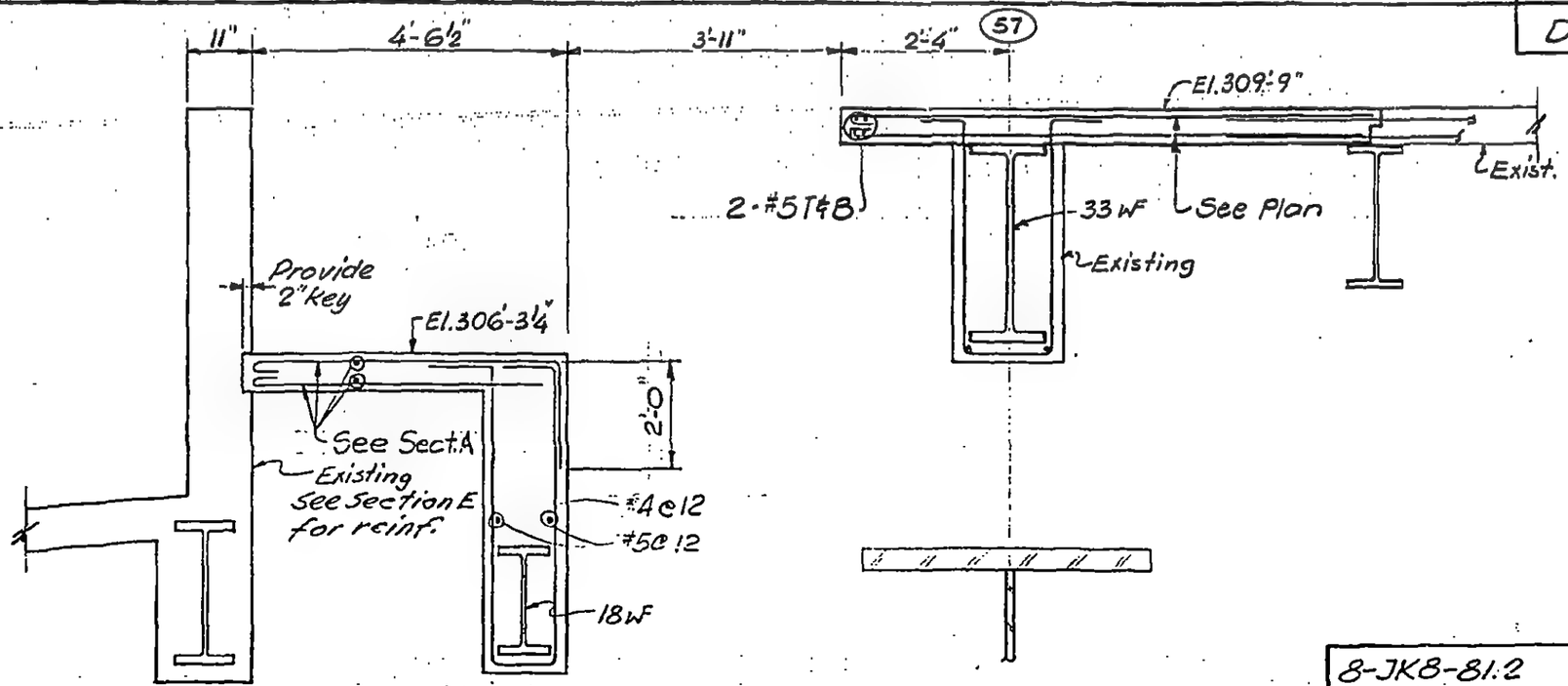

LICENSED PROFESSIONAL ENGINEER
LESLIE E. ROBERTSON
No. 34360
UNIVERSITY OF THE STATE OF NEW YORK

DESIGNED

DRAWN J.G.

REVIEWED L.E.R.

8-JK8-81.2

SKILLING, HELLE, CHRISTIANSEN, ROBERTSON — Structural & Civil Engineers

PROJECT: THE WORLD TRADE CENTER | TITLE: SECTION AT ESCALATOR El. 310 | DATE: 6-15-73

REVISIONS

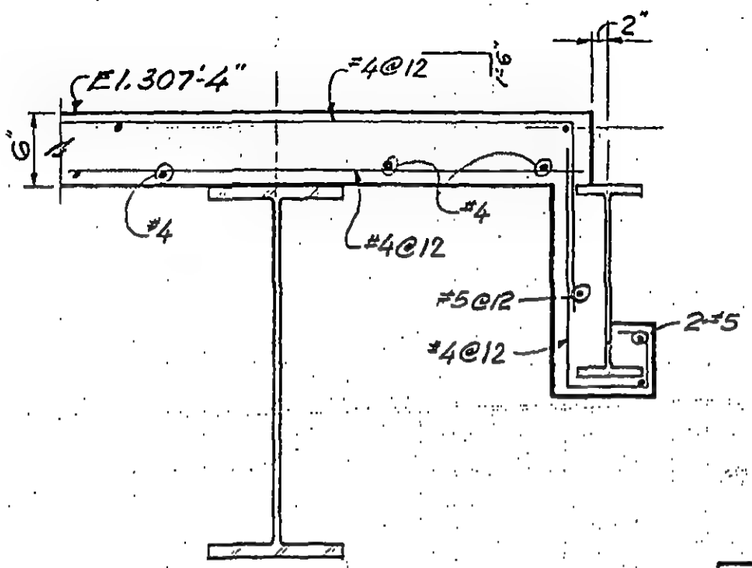

A

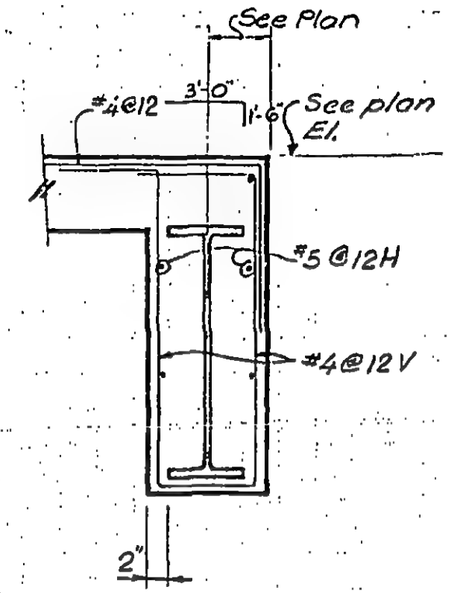

B

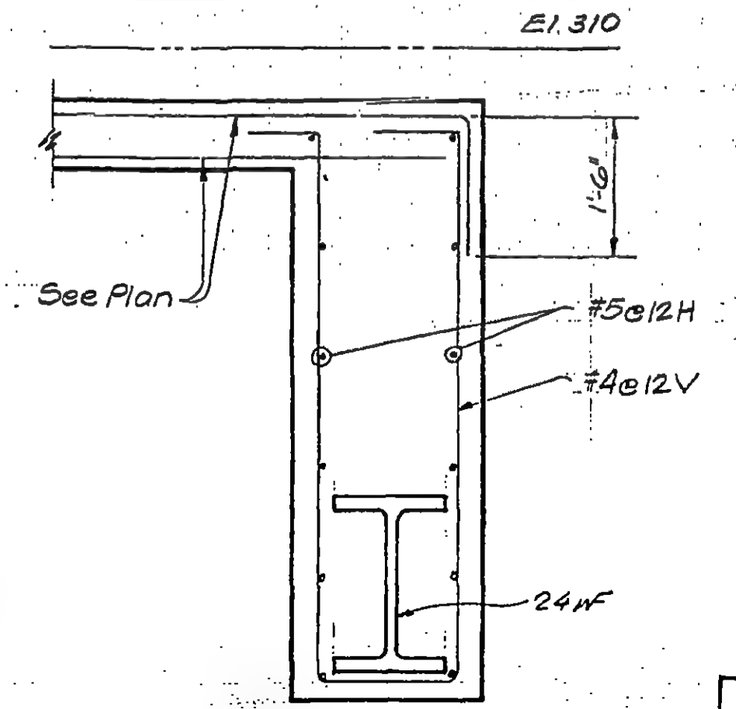

C

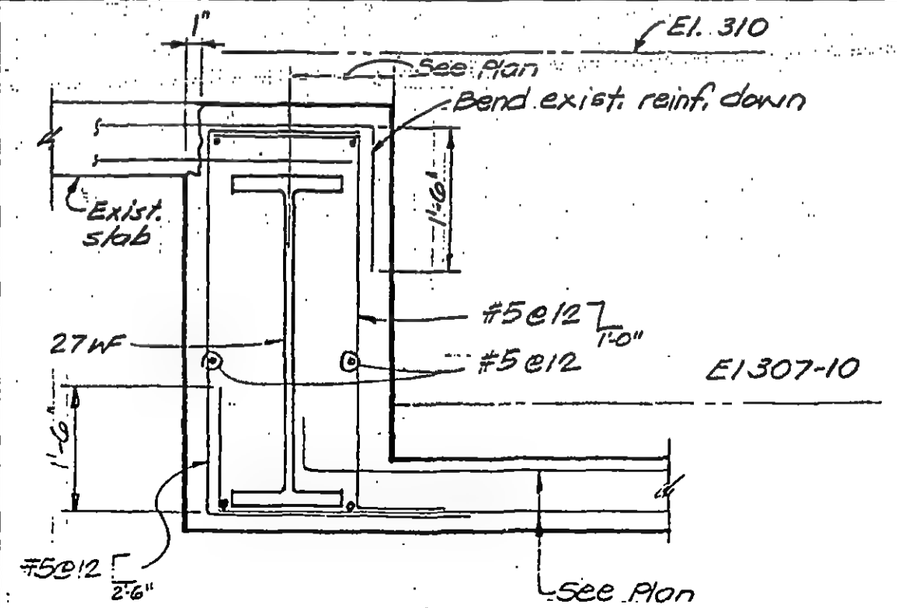

D

LICENSED PROFESSIONAL ENGINEER — LESLIE E. ROBERTSON — NO. 34360 — UNIVERSITY OF THE STATE OF NEW YORK

DESIGNED: K C
DRAWN: J. Gricius
REVIEWED: LER

8-JK8-82.1

SKILLING, HELLE, CHRISTIANSEN, ROBERTSON — Structural & Civil Engineers

PROJECT THE WORLD TRADE CENTER | TITLE SECTION AT SERVICE ELEVATORS | DATE 6-15-73

REVISIONS

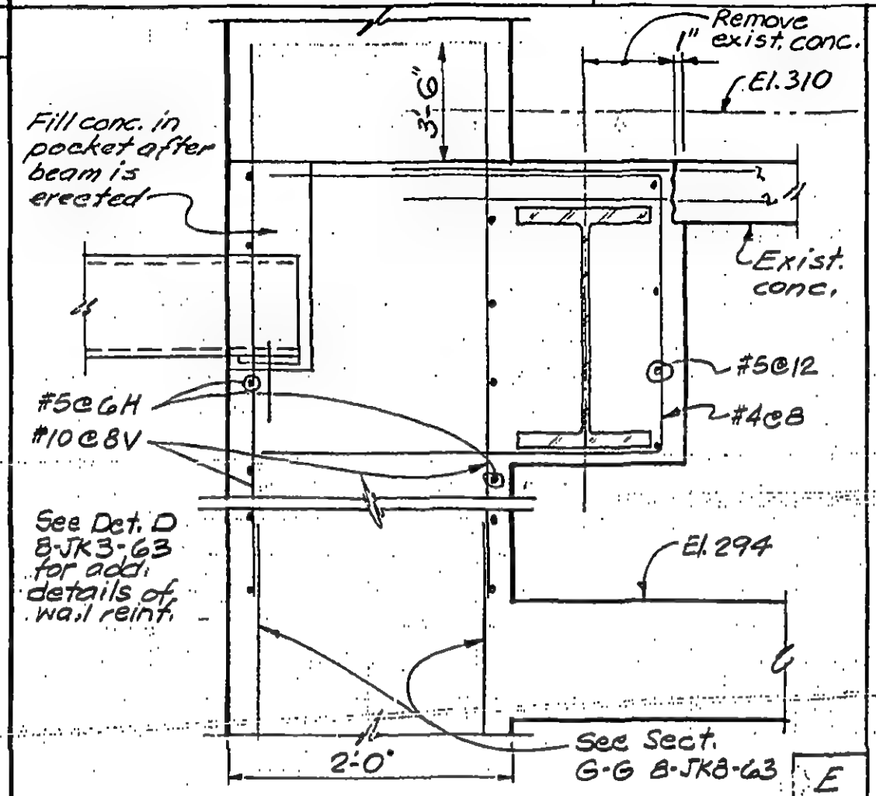

E

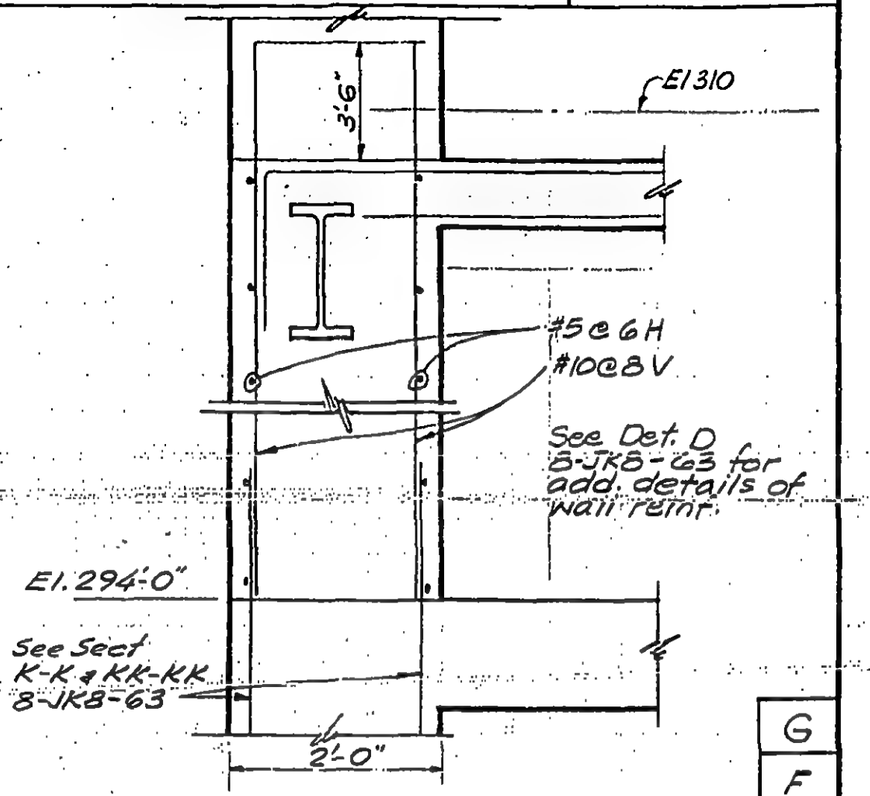

G

F

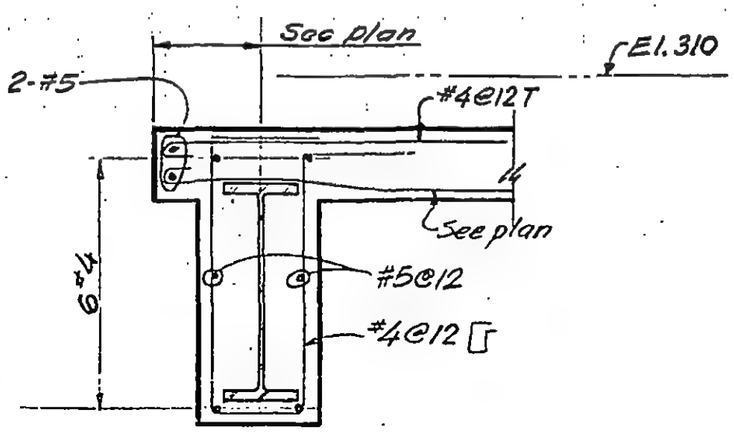

H

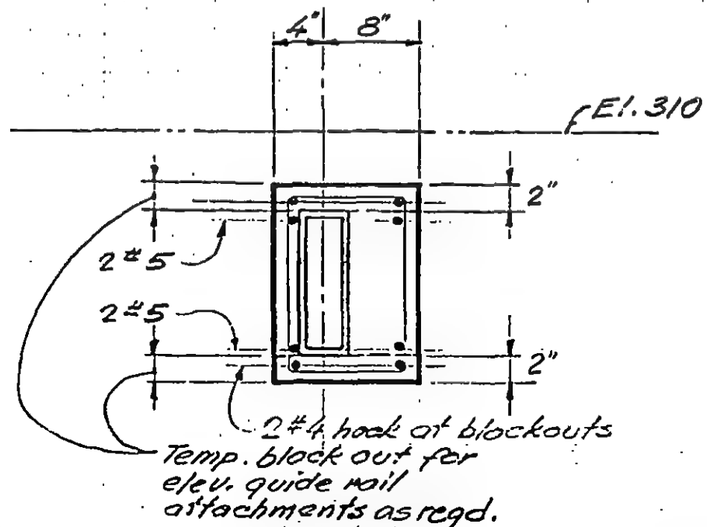

J

8-JK8-82.2

LICENSED PROFESSIONAL ENGINEER — LESLIE E. ROBERTSON — No. 34360 — UNIVERSITY OF THE STATE OF NEW YORK

DESIGNED K. C.

DRAWN J. Gricius

REVIEWED Wab

SKILLING, HELLE, CHRISTIANSEN, ROBERTSON — Structural & Civil Engineers

PROJECT: THE WORLD TRADE CENTER | TITLE: SECTION AT ESCALATOR PIT El. 310 | DATE: 6-15-73

REVISIONS

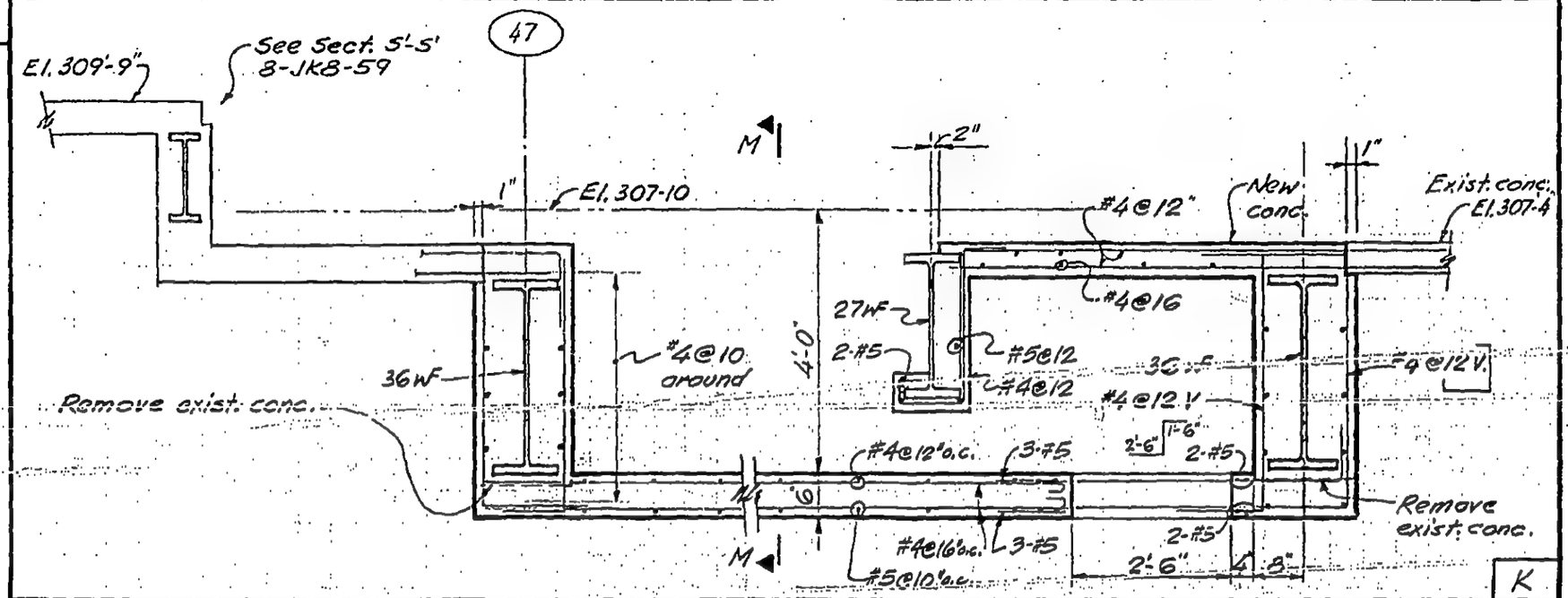

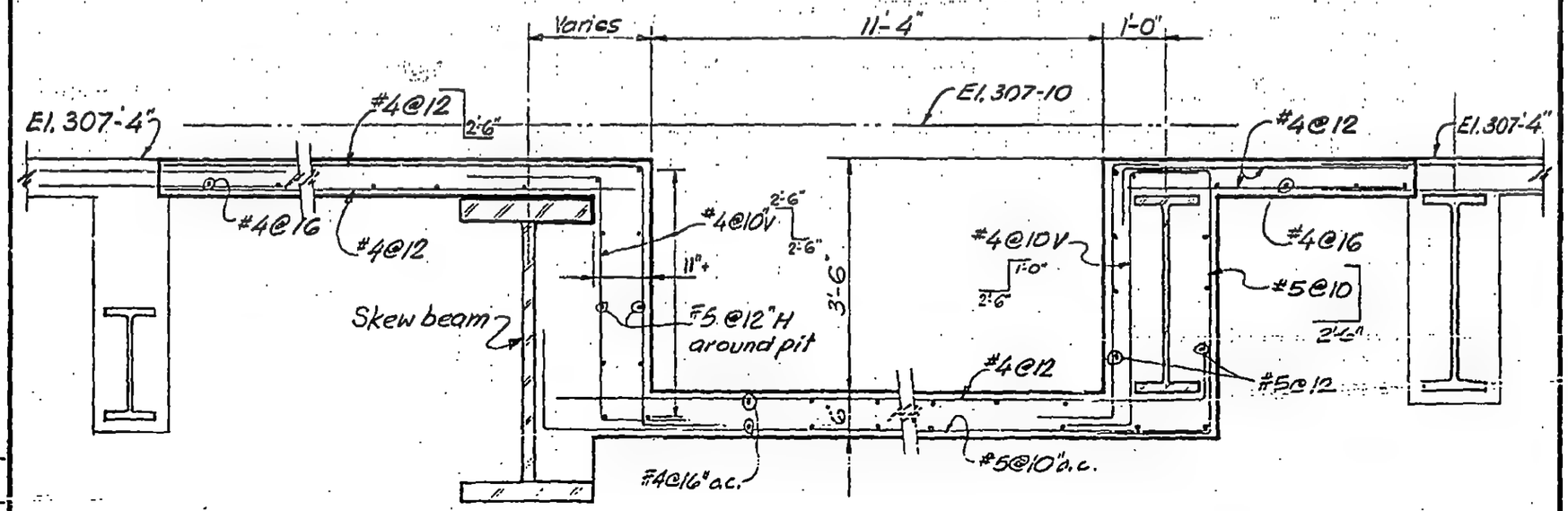

LICENSED PROFESSIONAL ENGINEER — LESLIE E. ROBERTSON — No. 34360 — UNIVERSITY OF THE STATE OF NEW YORK

DESIGNED K.C. P.Y.

DRAWN J. Gricius

REVIEWED Was

8-JK8-82.3

SKILLING, HELLE, CHRISTIANSEN, ROBERTSON — Structural & Civil Engineers

PROJECT: THE WORLD TRADE CENTER | TITLE: SECTIONS AT SERVICE ELEVATORS | DATE: 10-11-73

REVISIONS

4-5-74

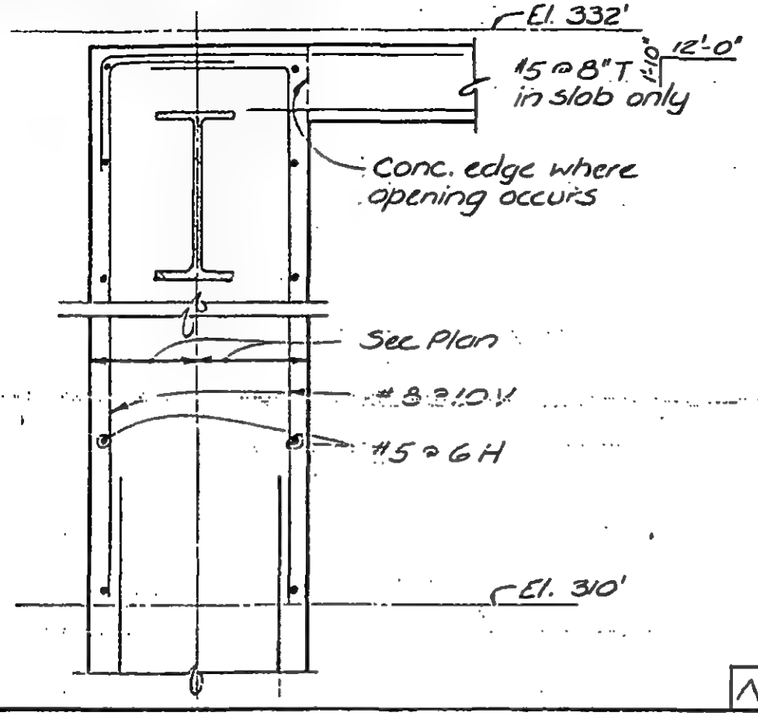

N P

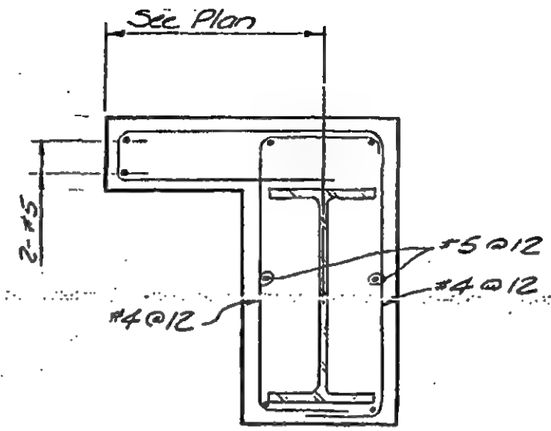

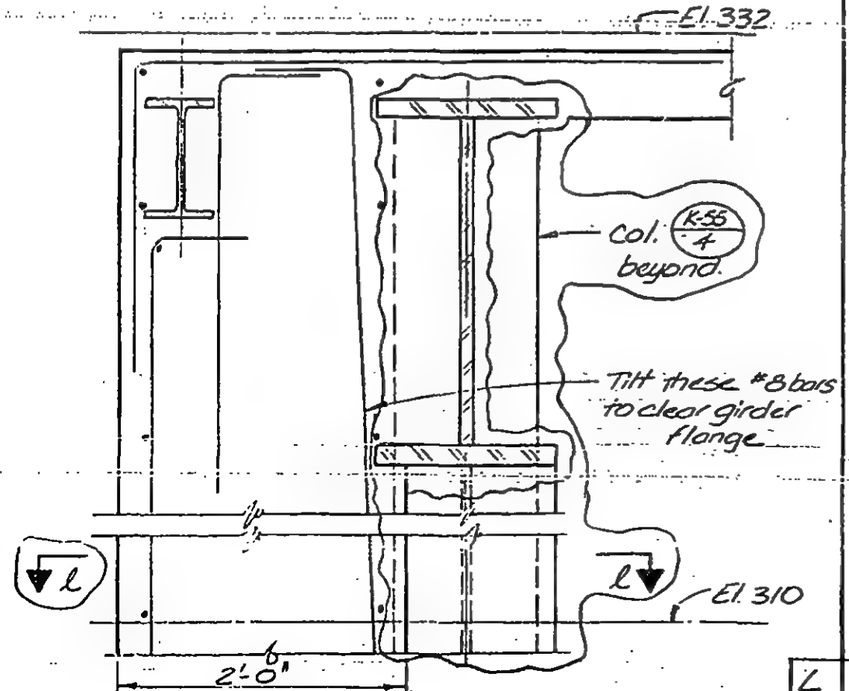

L l

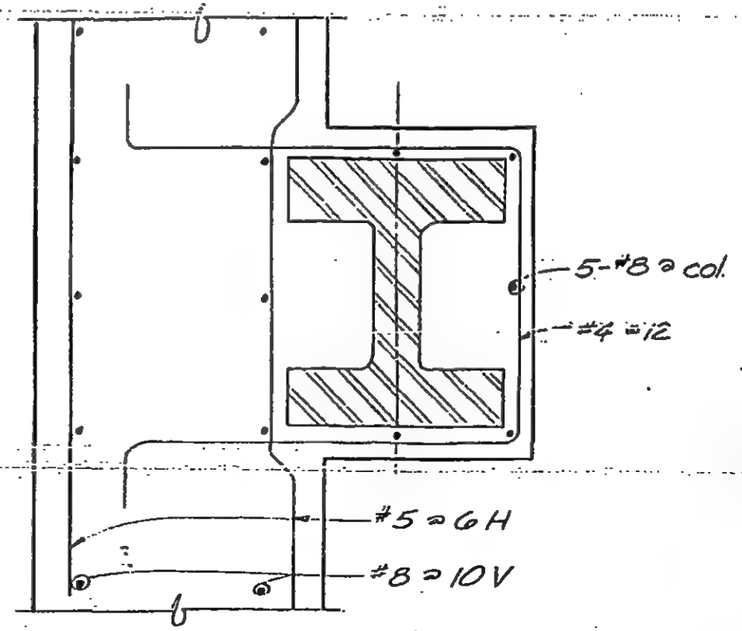

8-JKB-82.4

LICENSED PROFESSIONAL ENGINEER — LESLIE E. ROBERTSON — No 34360 — UNIVERSITY OF THE STATE OF NEW YORK

DESIGNED K.C

DRAWN J.B

REVIEWED J.T.M.

SKILLING, HELLE, CHRISTIANSEN, ROBERTSON — Structural & Civil Engineers

PROJECT: THE WORLD TRADE CENTER | TITLE: SECTIONS AT SERVICE ELEVATORS | DATE: 4-5-74

REVISIONS

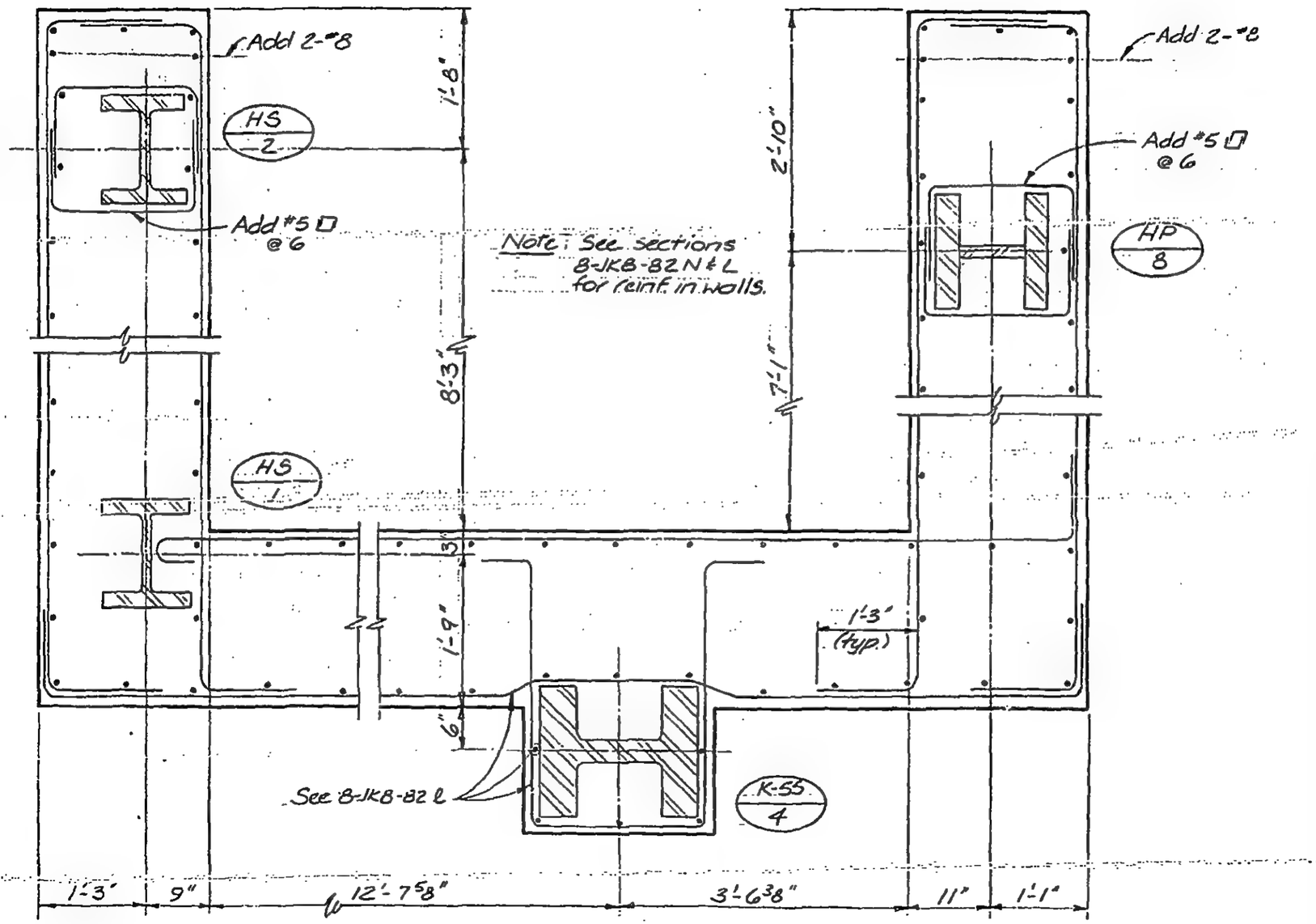

Note: See sections 8-JK8-82 N & L for reinf. in walls.

Placement of Wall Reinf. at El. 310

LICENSED PROFESSIONAL ENGINEER — LESLIE E. ROBERTSON — No 34360 — UNIVERSITY OF THE STATE OF NEW YORK

DESIGNED J.T.M.
DRAWN J.B.
REVIEWED WRB

Q

8-JK8-82.5

SKILLING, HELLE, CHRISTIANSEN, ROBERTSON — Structural & Civil Engineers

PROJECT: THE WORLD TRADE CENTER | TITLE: SECTION AT NEW OPENING El. 310 | DATE: 6-15-73

REVISIONS

Notes:

1. Slabs and other construction shall be shored as required before removing existing concrete.
2. Remove existing concrete without damage to existing reinforcing.
3. Clean face of existing concrete and thoroughly coat entire surface with "Approved" epoxy bonding compound.
4. Cast new concrete using approved "non-shrink" f'c = 4000 psi concrete, stone or lightweight aggregate to match existing.

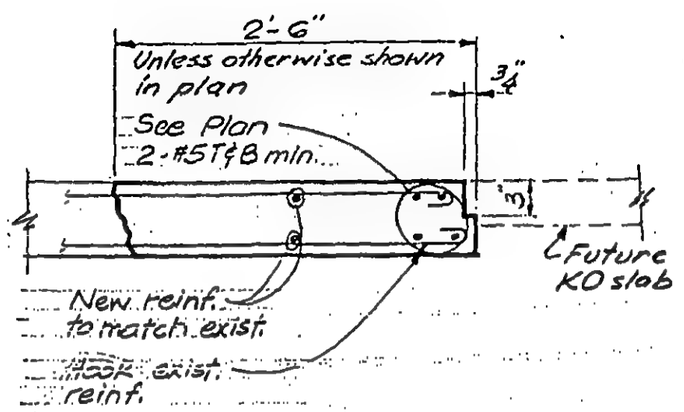

A

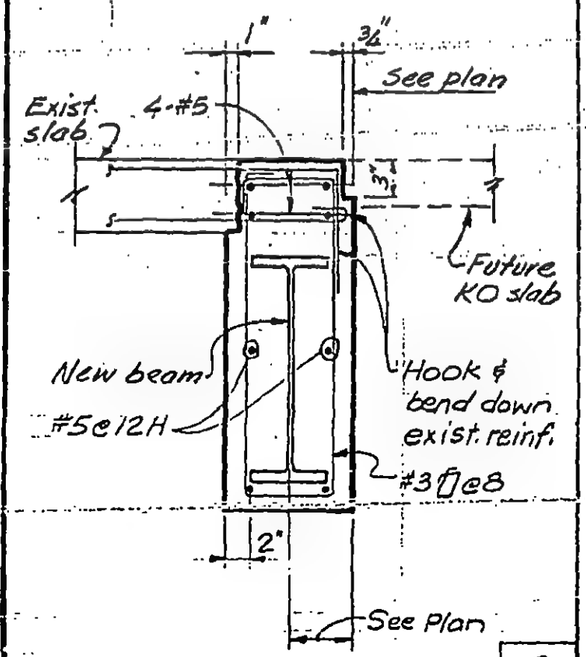

B

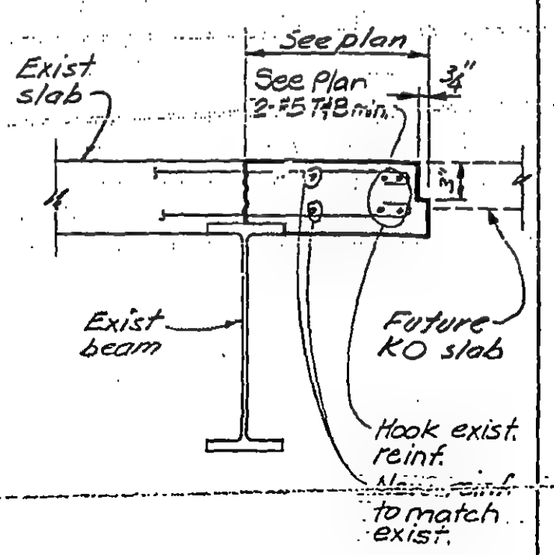

C

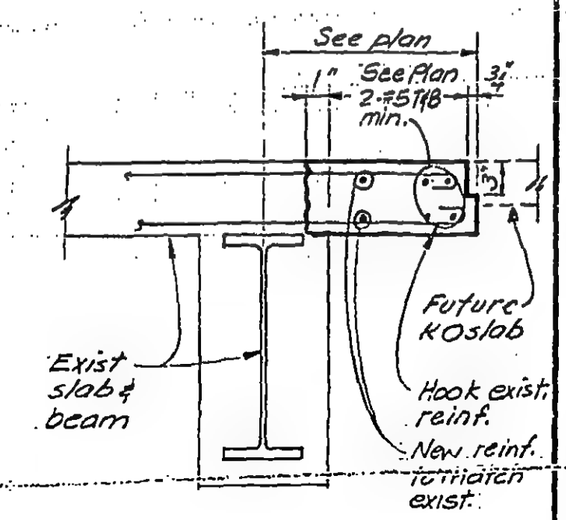

D

LICENSED PROFESSIONAL ENGINEER — LESLIE E. ROBERTSON — No. 34360 — UNIVERSITY OF THE STATE OF NEW YORK

DESIGNED

DRAWN J. G.

REVIEWED W&B

8-JK8-83.1

SKILLING, HELLE, CHRISTIANSEN, ROBERTSON — Structural & Civil Engineers

PROJECT THE WORLD TRADE CENTER | TITLE SECTIONS AT NEW OPNGS El. 310 | DATE 6-15-73

REVISIONS

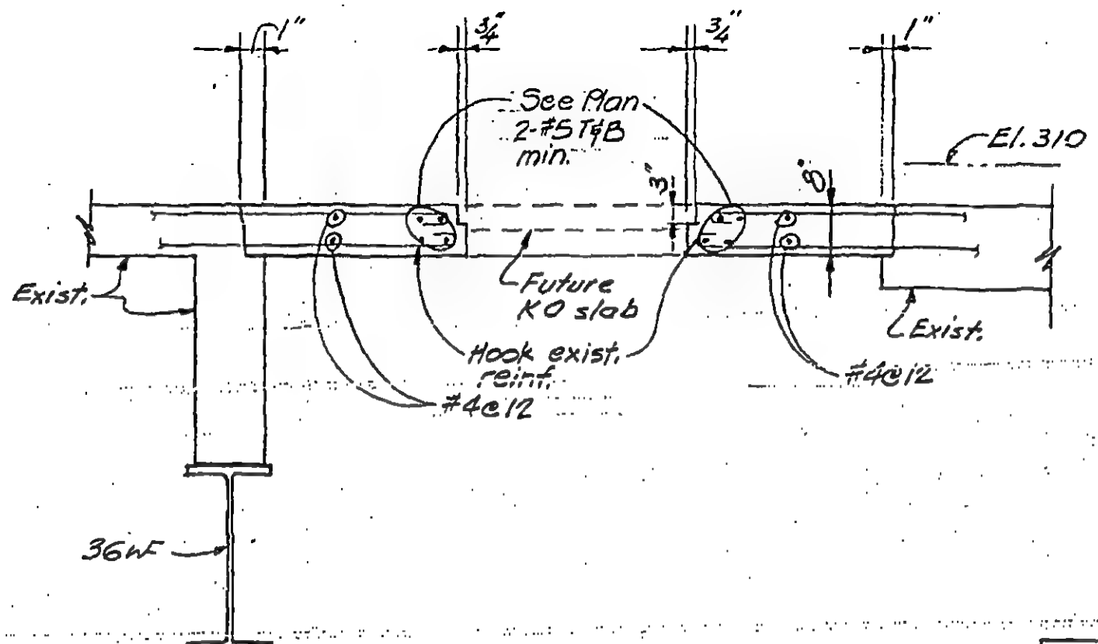

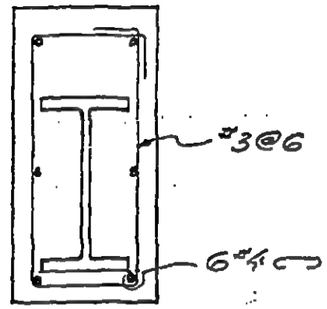

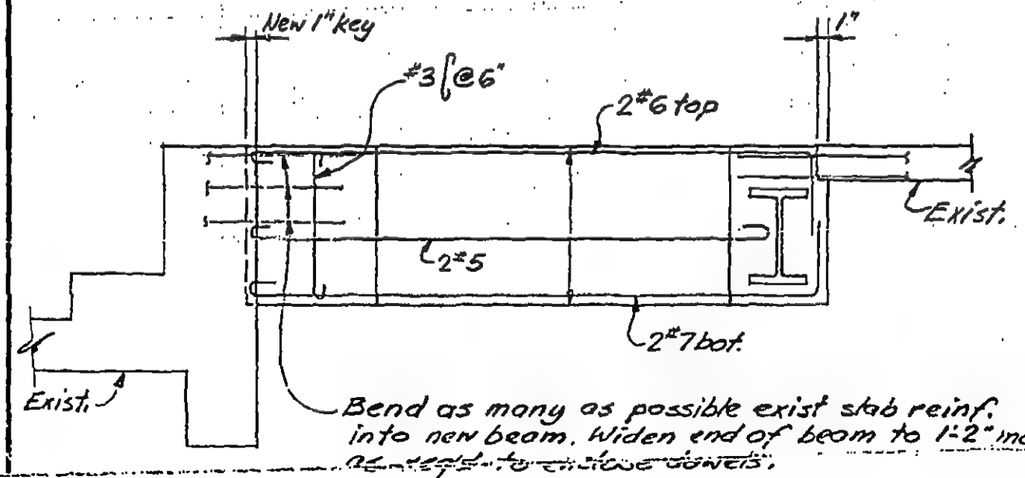

E F G

LICENSED PROFESSIONAL ENGINEER
LESLIE E. ROBERTSON
No 34360
UNIVERSITY OF THE STATE OF NEW YORK

DESIGNED

DRAWN J.G.

REVIEWED WOB

8-JK8-83.2

SKILLING, HELLE, CHRISTIANSEN, ROBERTSON — Structural & Civil Engineers

PROJECT: THE WORLD TRADE CENTER | TITLE: MECH. PLATFORM ZONE K5 EL.303-6 PLAN | DATE: 6-15-73

REVISIONS

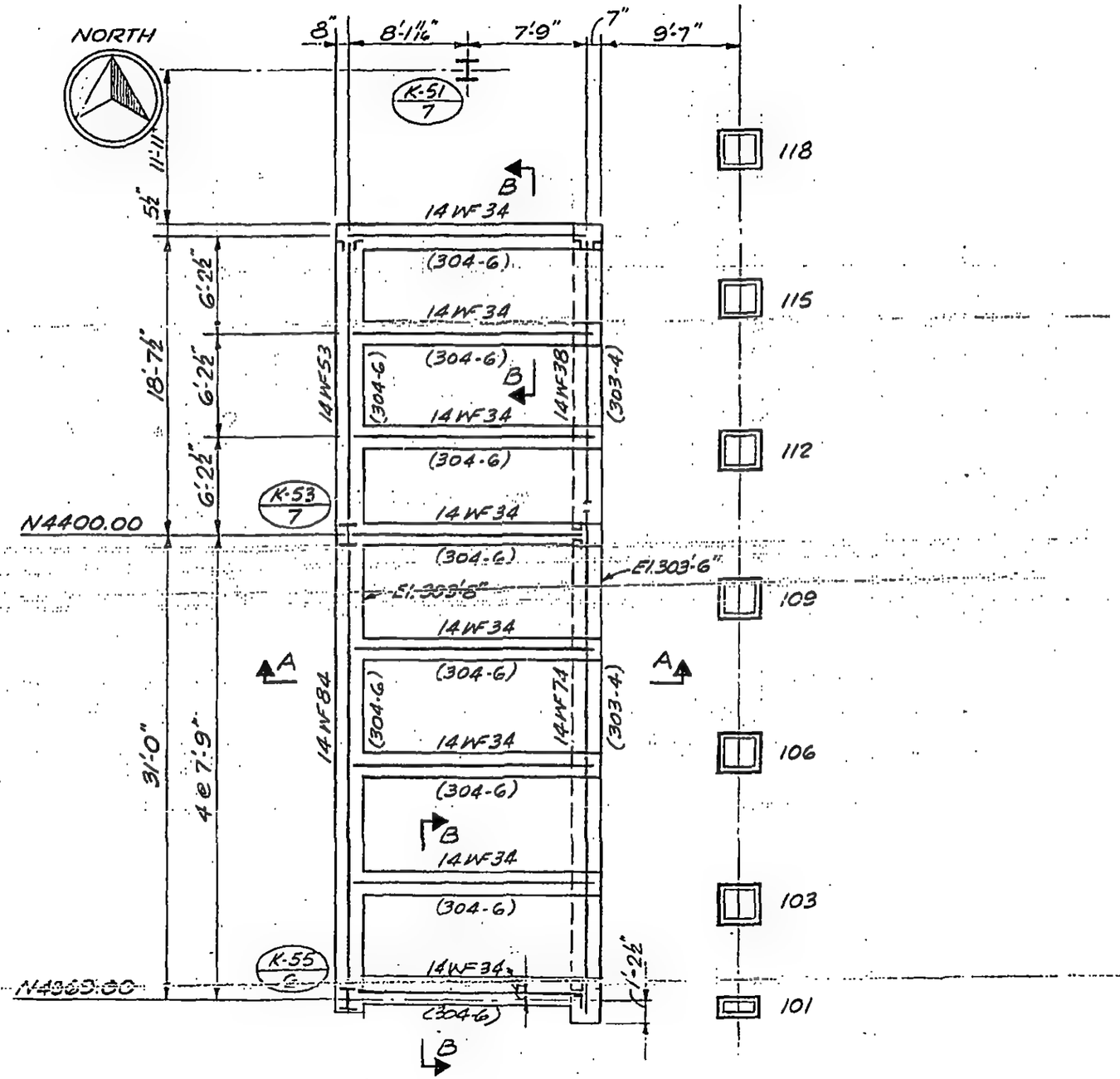

Mechanical Platform

Reference floor at El. 303'-6"

8-JK8-84.1

LICENSED PROFESSIONAL ENGINEER LESLIE E. ROBERTSON UNIVERSITY OF THE STATE OF NEW YORK

DESIGNED

DRAWN SC

REVIEWED

SKILLING, HELLE, CHRISTIANSEN, ROBERTSON — Structural & Civil Engineers

PROJECT: THE WORLD TRADE CENTER | TITLE: MECH. PLATFORM ZONE K5 EL.303-6 SECTIONS | DATE: 6-15-73

REVISIONS

A

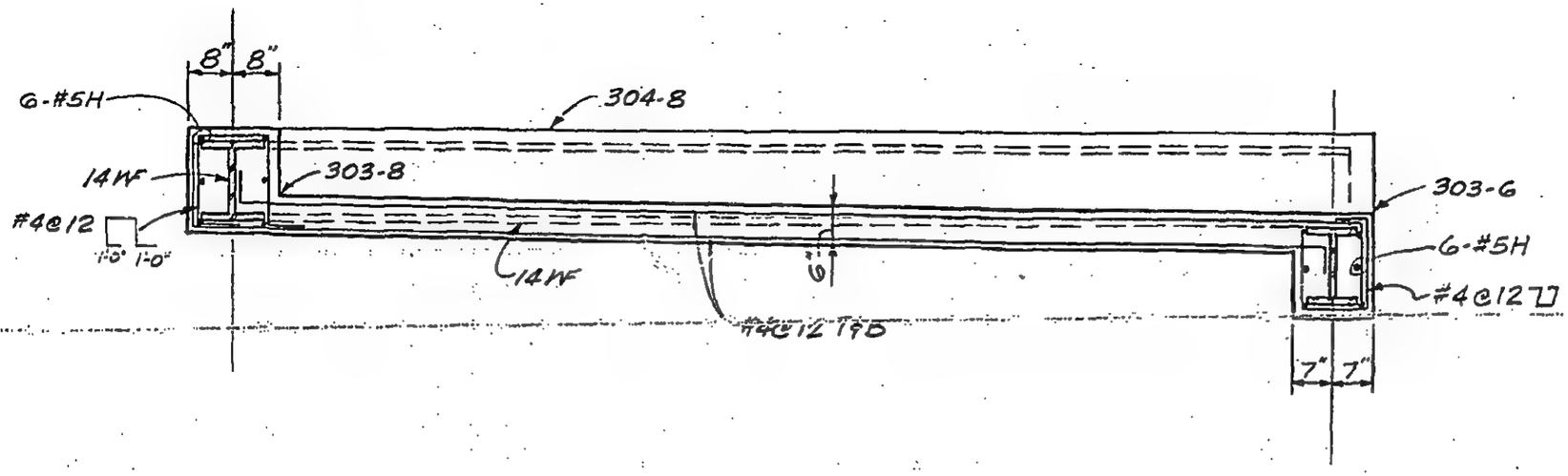

B

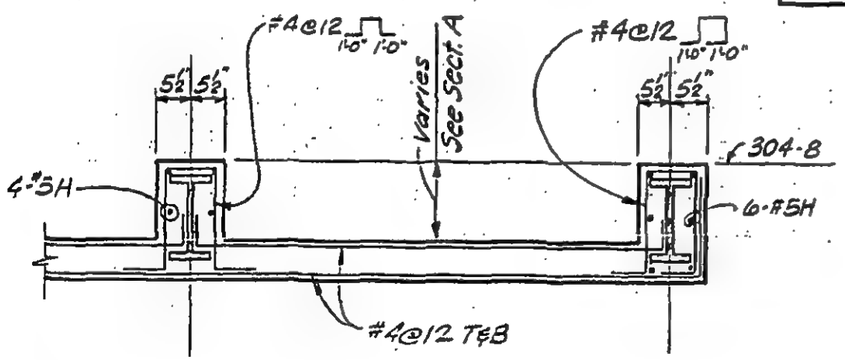

LICENSED PROFESSIONAL ENGINEER
LESLIE E. ROBERTSON
NO. 34360
UNIVERSITY OF THE STATE OF NEW YORK

DESIGNED

DRAWN
SC

REVIEWED
LERob

8-JK8-84.2

SKILLING, HELLE, CHRISTIANSEN, ROBERTSON — Structural & Civil Engineers

PROJECT: THE WORLD TRADE CENTER

TITLE: MECH. PLATFORM ZONE K5 EL. 320 PLAN

DATE: 6-15-73

REVISIONS

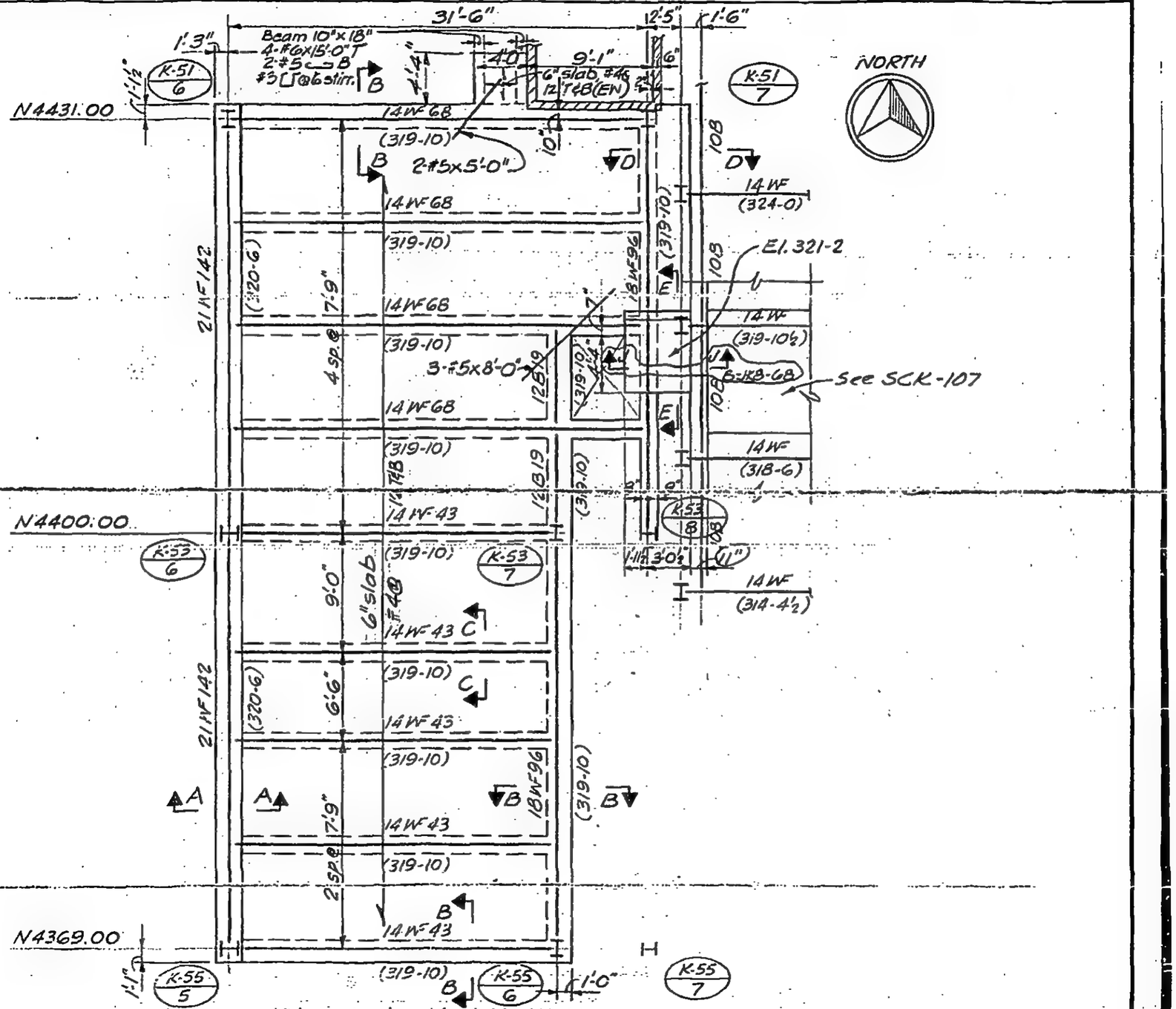

Mezzanine Level
Reference floor at El. 320'-0"

LICENSED PROFESSIONAL ENGINEER
LESLIE E. ROBERTSON
No 34360
UNIVERSITY OF THE STATE OF NEW YORK

DESIGNED

DRAWN SC

REVIEWED WEP

8-JKB-85.1

SKILLING, HELLE, CHRISTIANSEN, ROBERTSON — Structural & Civil Engineers

PROJECT: THE WORLD TRADE CENTER

TITLE: MECH. PLATFORM ZONE K5 EL.320 SECTIONS

DATE: 6-15-73

REVISIONS

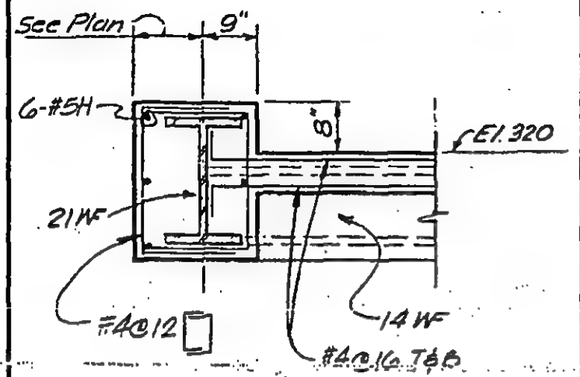

A

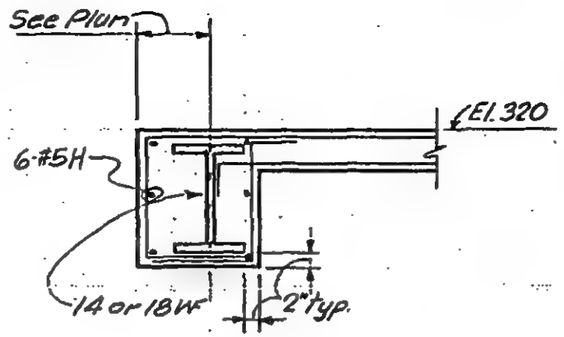

B

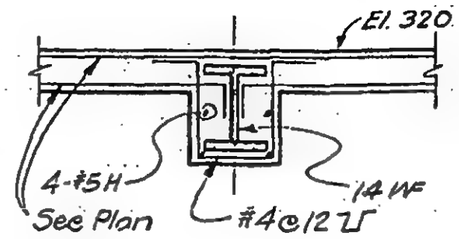

C

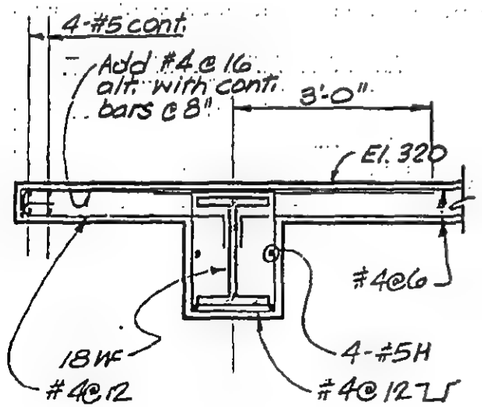

D

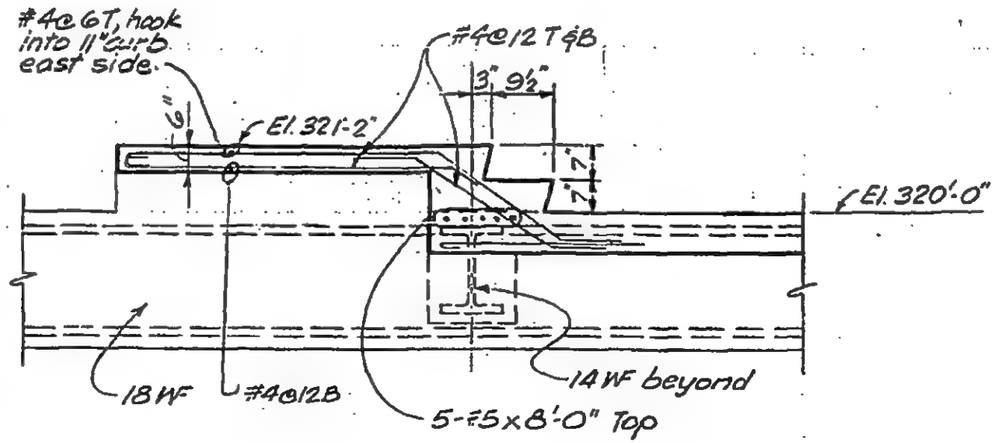

E

LICENSED PROFESSIONAL ENGINEER
LESLIE E. ROBERTSON
No. 34360
UNIVERSITY OF THE STATE OF NEW YORK

DESIGNED

DRAWN
SC

REVIEWED

8-JK8-85.2

SKILLING, HELLE, CHRISTIANSEN, ROBERTSON — Structural & Civil Engineers

PROJECT: THE WORLD TRADE CENTER

TITLE: SECTION MECH. PLATFORM OVER RAMP M

DATE: 6-15-73

REVISIONS

A

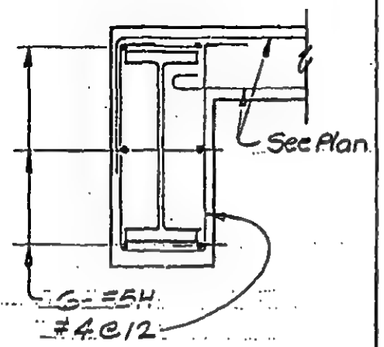

B

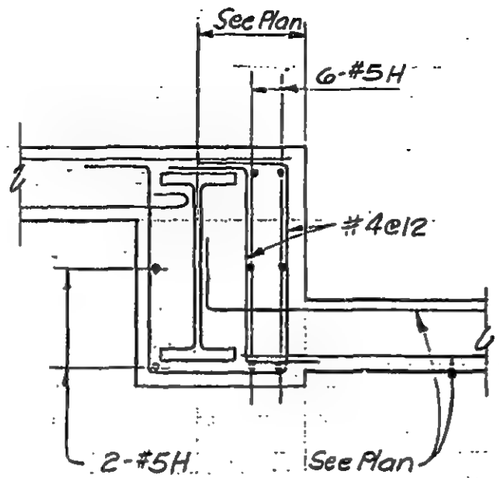

C

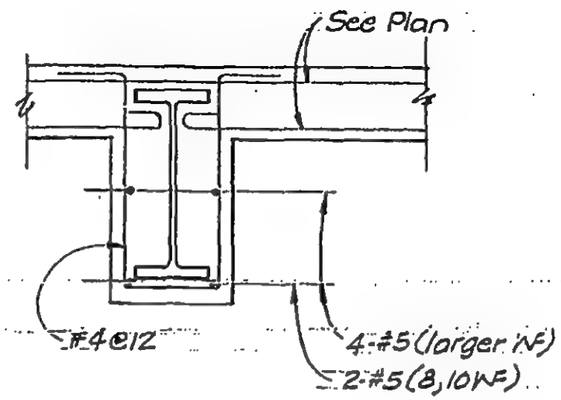

D

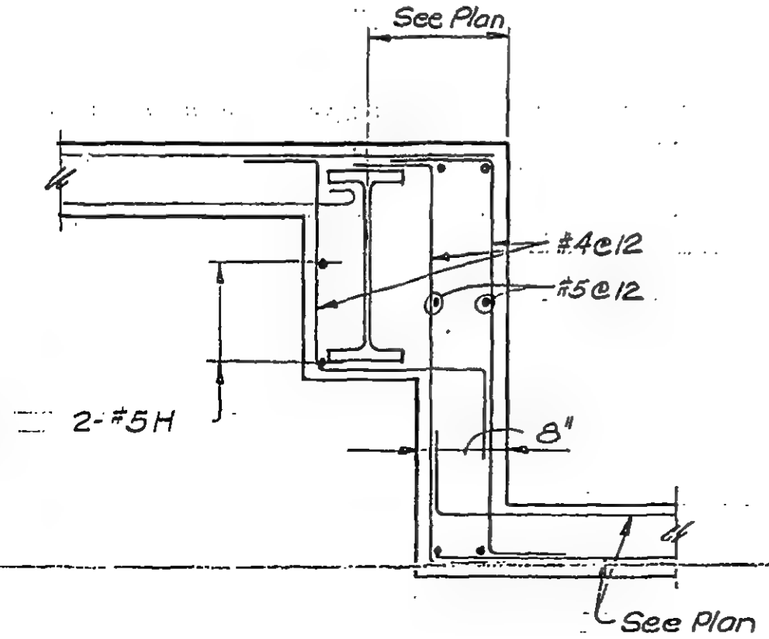

E

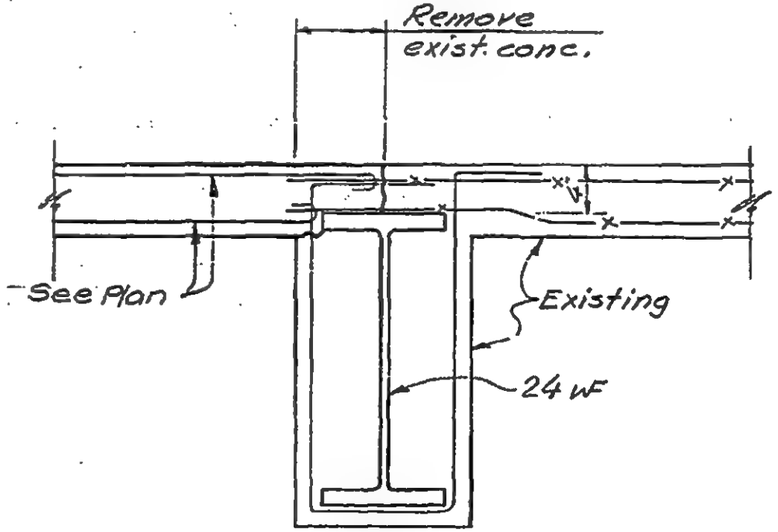

LICENSED PROFESSIONAL ENGINEER
LESLIE E. ROBERTSON
No. 34360
UNIVERSITY OF THE STATE OF NEW YORK

DESIGNED

DRAWN J.G.

REVIEWED LEB

8-JK8-86

SKILLING, HELLE, CHRISTIANSEN, ROBERTSON — Structural & Civil Engineers

PROJECT THE WORLD TRADE CENTER | TITLE SECTION El. 310 | DATE 6-15-73

REVISIONS

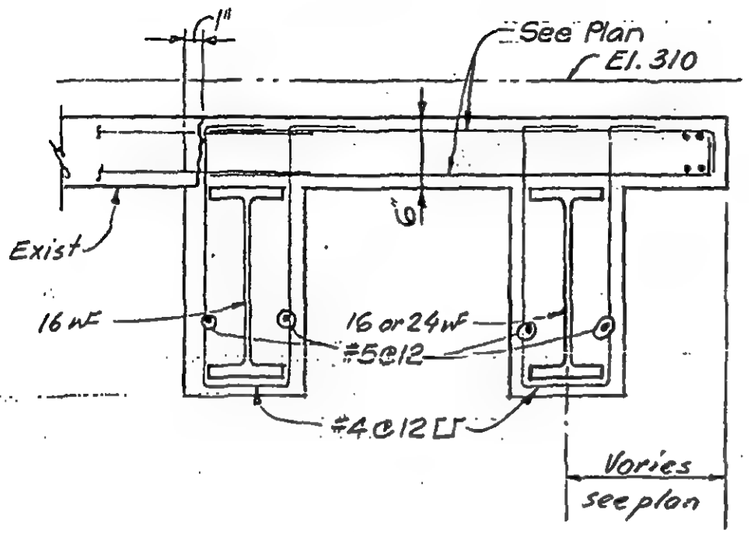

A

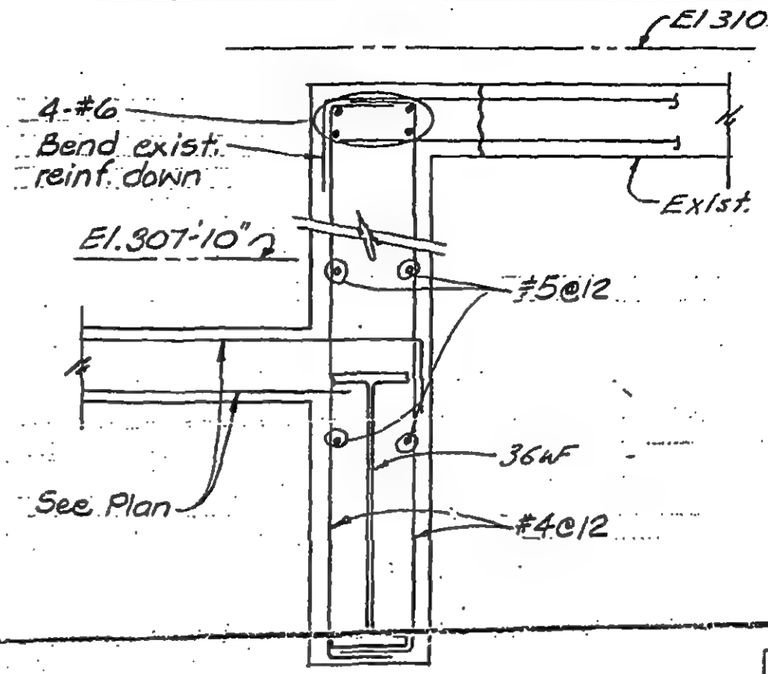

B

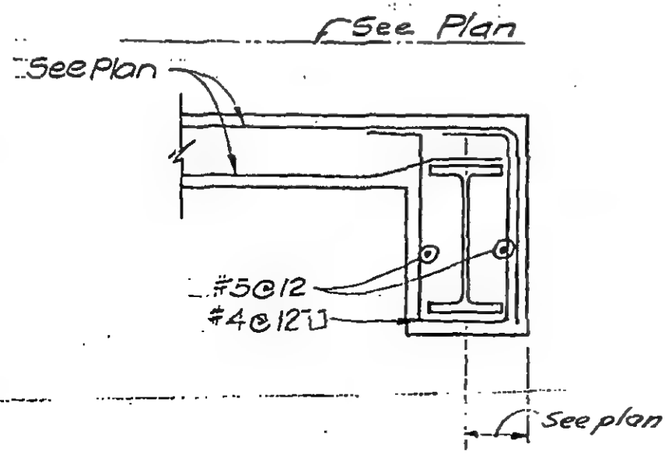

C

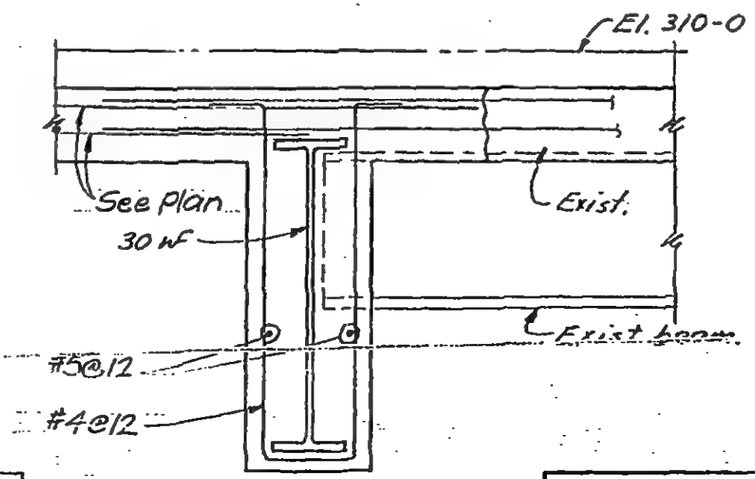

D

LICENSED PROFESSIONAL ENGINEER — LESLIE E. ROBERTSON — No 34360 — UNIVERSITY OF THE STATE OF NEW YORK

DESIGNED

DRAWN J.G.

REVIEWED WAB

8-JKB-87

BOOK 8

CHAPTERS

10 & 11

[illegible] ROBERTSON Structural & Civil Engineers

THE WORLD TRADE CENTER | TITLE DETAIL AT COLUMN-FLOOR 107 | DATE 11-23-70

...IONS
6-16-72
7-27-73 (As built)
9-12-73
7-12-74

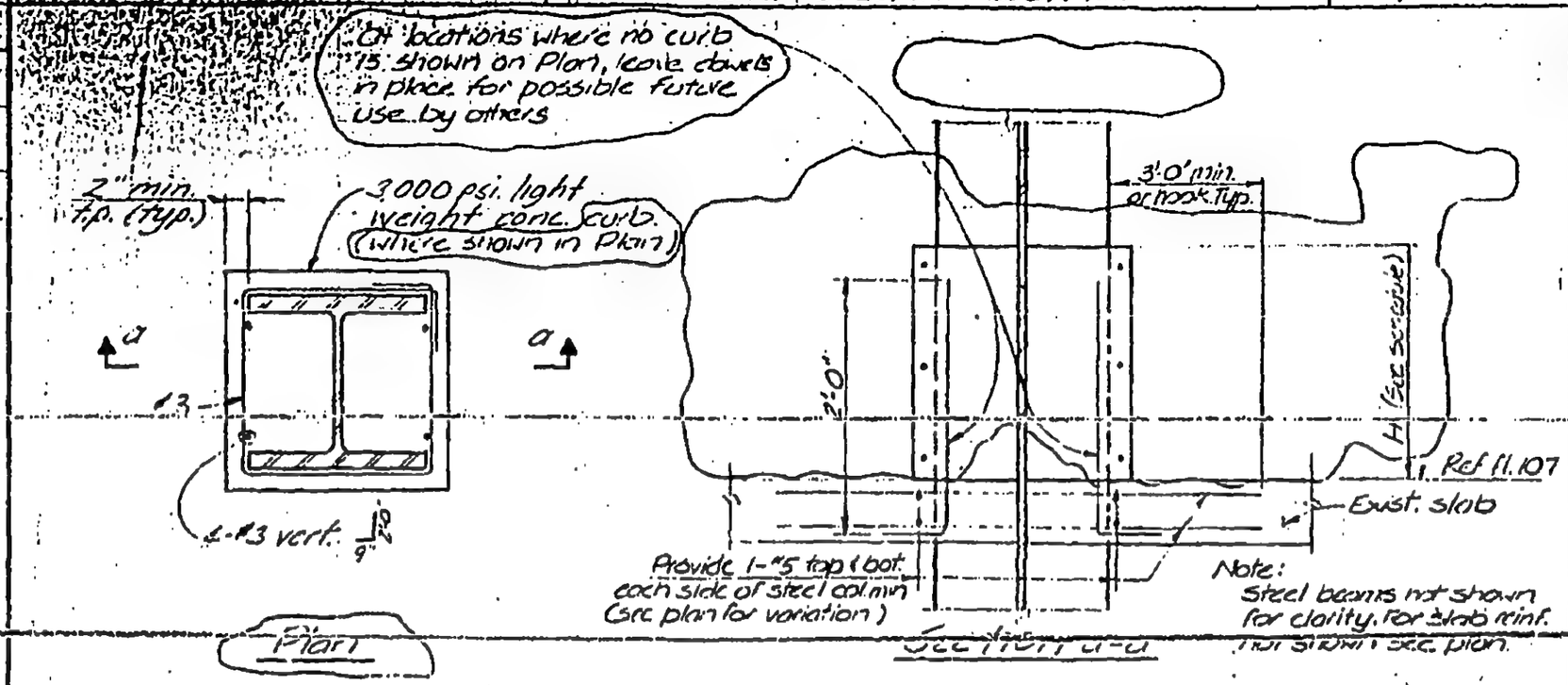

Detail No.	Dimension "H"
8-AB10-1.1A	0" (No curb)
8-AB10-1.1B	1'-7½"
8-AB10-1.1C	1'-10"
8-AB10-1.1D	1'-8"

LICENSED PROFESSIONAL ENGINEER LESLIE E. ROBERTSON No. 34360 UNIVERSITY OF THE STATE OF NEW YORK

DESIGNED R. Chiang

DRAWN J. Adams

REVIEWED WOB

8-AB10-1.1

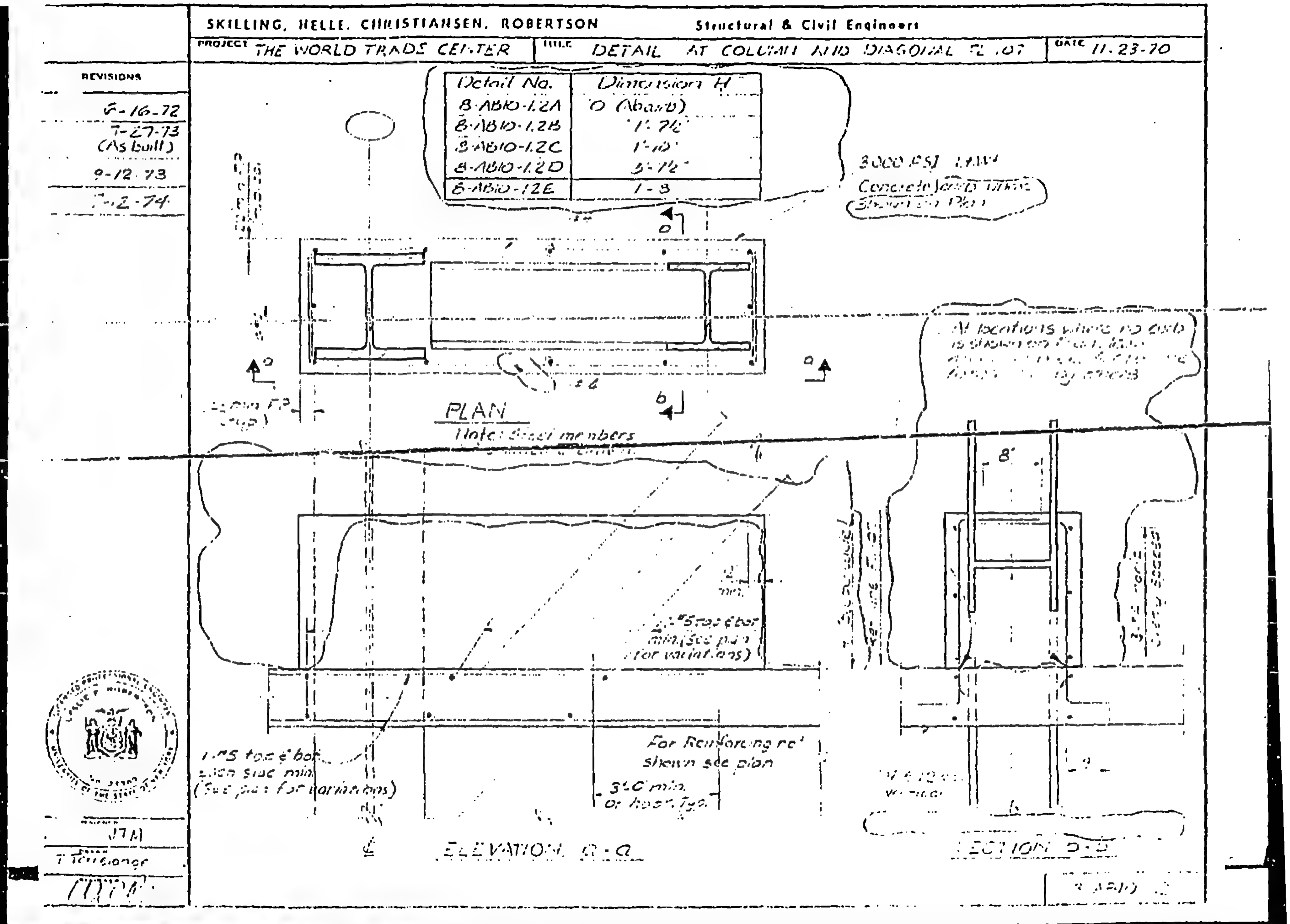
SKILLING, HELLE, CHRISTIANSEN, ROBERTSON
Structural & Civil Engineers
PROJECT THE WORLD TRADE CENTER
TITLE DETAIL AT COLUMN AND DIAGONAL FL 107
DATE 11-23-70
REVISIONS
6-16-72
7-27-73
(As built)
9-12-73
Detail No.
Dimension H
8-AB10-12A
0 (Above)
8-AB10-12B
8-AB10-12C
8-AB10-12D
8-AB10-12E
1-8
3000 PSI
PLAN
For Reinforcing not shown see plan
ELEVATION a-a
SECTION b-b
JTM

SKILLING, HELLE, CHRISTIANSEN, ROBERTSON — Structural & Civil Engineers

PROJECT: THE WORLD TRADE CENTER | TITLE: TYPICAL CURB DETAIL - FLOOR 107 | DATE: 11-23-70

REVISIONS

6-16-72

7-27-73 (As built)

9-12-73

7-12-74

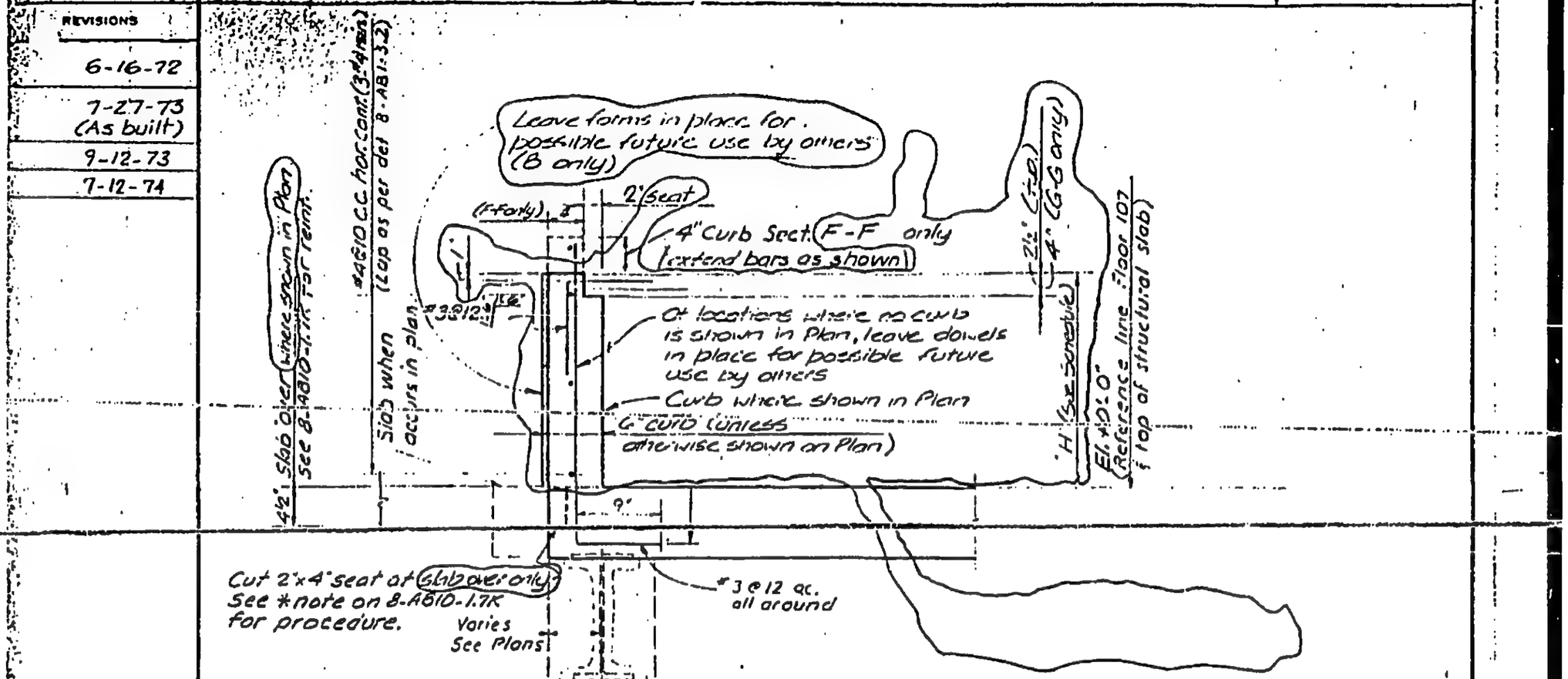

Section	"H"
A-A	0'(no curb)
B-B	0 (no curb)
C-C	1'-10"
D-D	1'-6"
E-E	3'-10"
F-F	1'-10"
G-G	1'-10½"
H-H	2'-0"

Note: See detail 8AB10-1.4 for typical corc slab detail

Section A-A
Section B-B
Section C-C
Section D-D
Section E-E
Section F-F
Section G-G
Section H-H

LICENSED PROFESSIONAL ENGINEER — LESLIE E. ROBERTSON — NO 34360 — UNIVERSITY OF THE STATE OF NEW YORK

Designed: JTM

Drawn: F. Smith

Checked: WEB

8-AB10-1.3

SKILLING, HELLE, CHRISTIANSEN, ROBERTSON — Structural & Civil Engineers

PROJECT: THE WORLD TRADE CENTER | TITLE: TYPICAL CORE SLAB DETAIL - FL.107 | DATE: 11-23-70

REVISIONS

6-16-72

7-27-73 (As built)

9-12-73

7-12-74

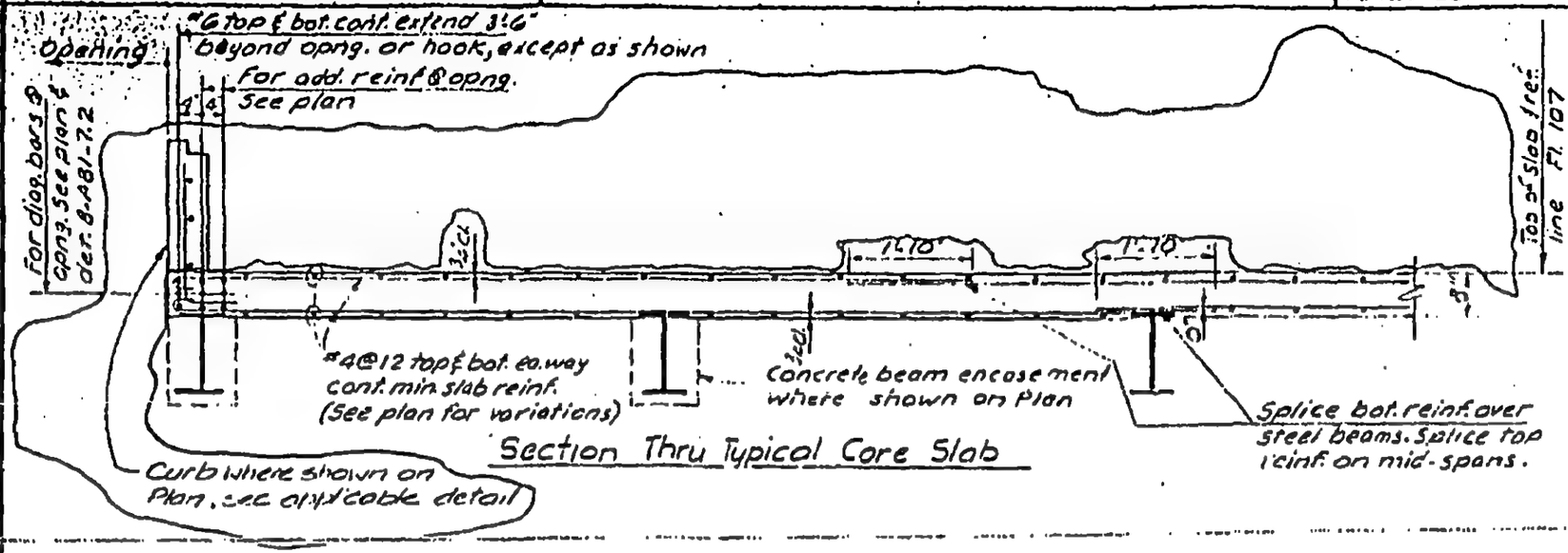

Section Thru Typical Core Slab

LICENSED PROFESSIONAL ENGINEER LESLIE E. ROBERTSON No. 34360 UNIVERSITY OF THE STATE OF NEW YORK

DESIGNED: J T M

DRAWN: F. Smith

CHECKED: (illegible)

8-AB10-1.4

SKILLING, HELLE, CHRISTIANSEN, ROBERTSON — Structural & Civil Engineers

PROJECT: THE WORLD TRADE CENTER | TITLE: TYPICAL DETAILS-CORE AREA - FLOOR 107 | DATE: 11-23-70

REVISIONS
6-16-72
7-27-73 (As built)
9-12-73
10-4-73
7-12-74

4-#5 cont. unless otherwise shown.

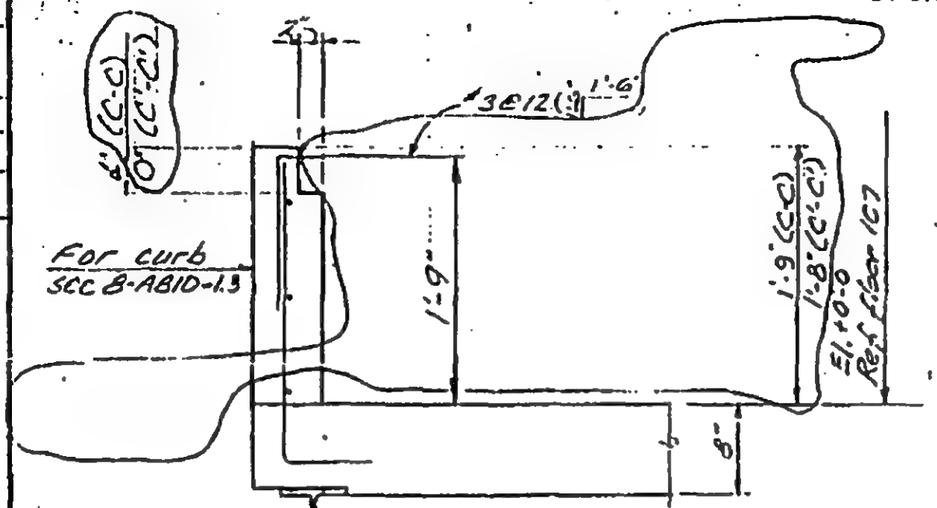

Section C-C

Section C'-C'

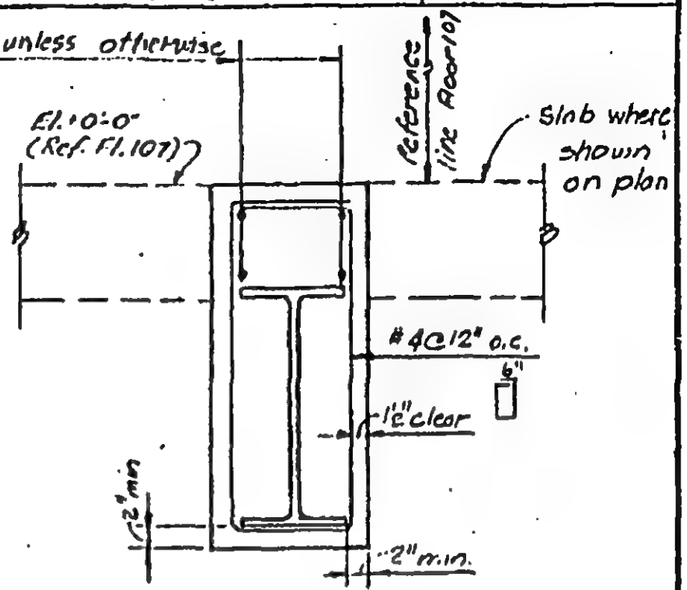

Section D-D

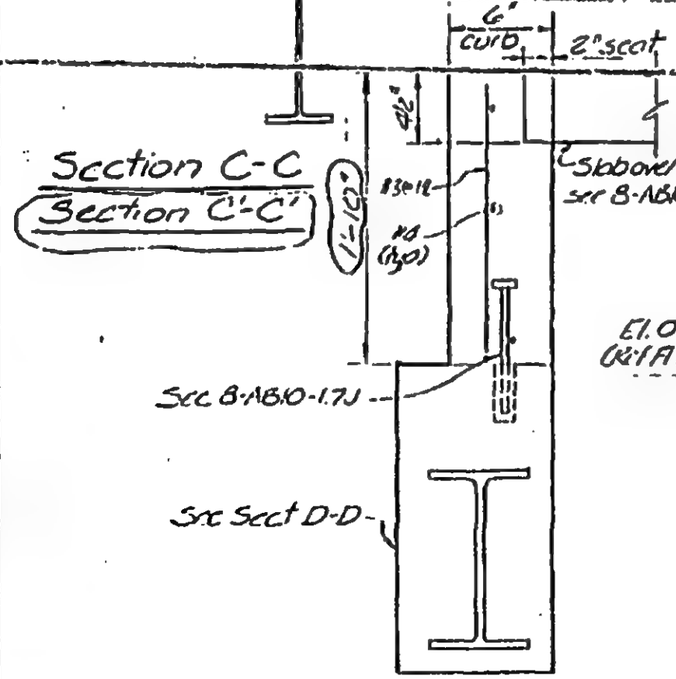

Section E-E

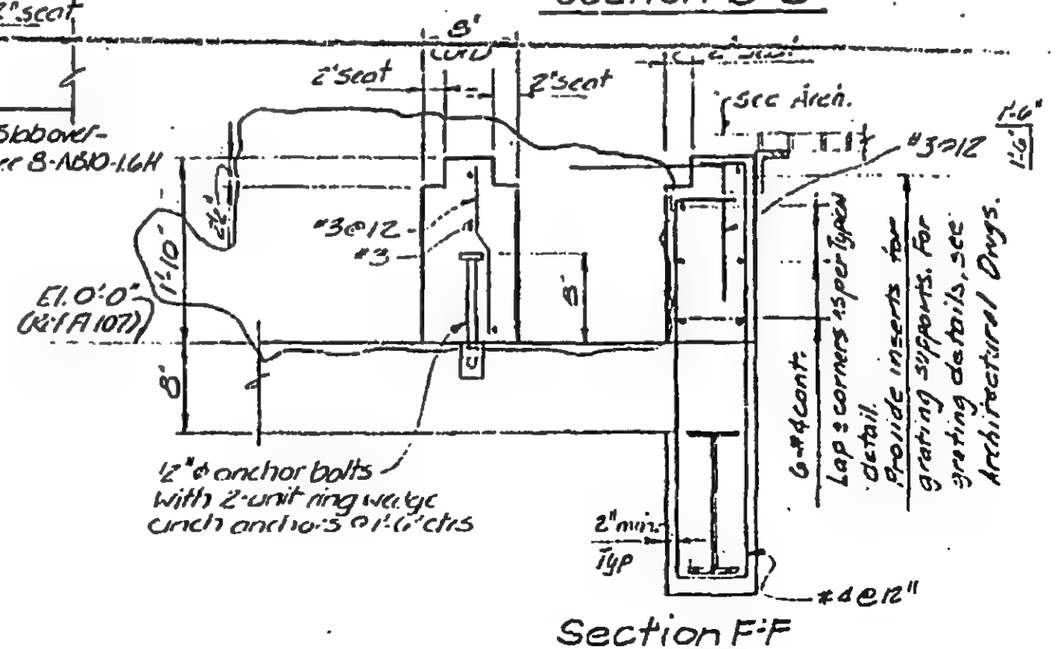

Section F-F

LESLIE E. ROBERTSON — LICENSED PROFESSIONAL ENGINEER — No. 34380 — UNIVERSITY OF THE STATE OF NEW YORK

Designed: J.T.M.
Drawn: J. Atkins
Checked:

S-AB10-1.5

SKILLING HELLE CHRISTIANSEN ROBERTSON — Structural & Civil Engineers

PROJECT: THE WORLD TRADE CENTER | TITLE: TYPICAL DETAILS CORE AREA - FLOOR 107 | DATE: 11-23-70

REVISIONS
6-16-72
7-27-73 (As built)
9-12-73
10-4-73
7-12-74

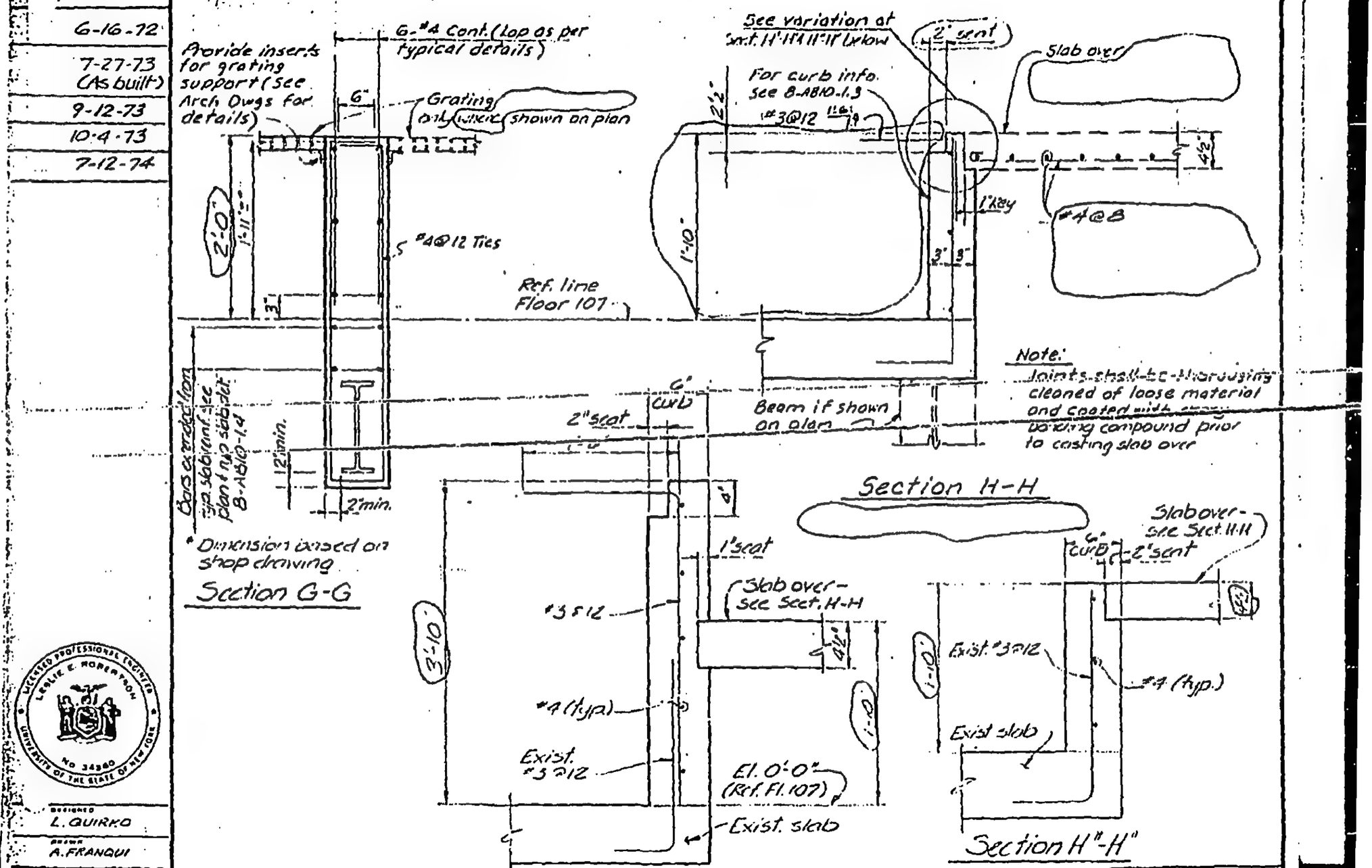

LICENSED PROFESSIONAL ENGINEER — LESLIE E. ROBERTSON — NO 34360 — UNIVERSITY OF THE STATE OF NEW YORK

DESIGNED L. QUIRKO
DRAWN A. FRANQUI
REVIEWED LEROB

8-AB10-1.6

SKILLING, HELLE, CHRISTIANSEN, ROBERTSON — Structural & Civil Engineers

PROJECT: THE WORLD TRADE CENTER

TITLE: TYPICAL DETAILS - CORE AREA - FLOOR 107

DATE: 9-12-73

REVISIONS: 7-12-74

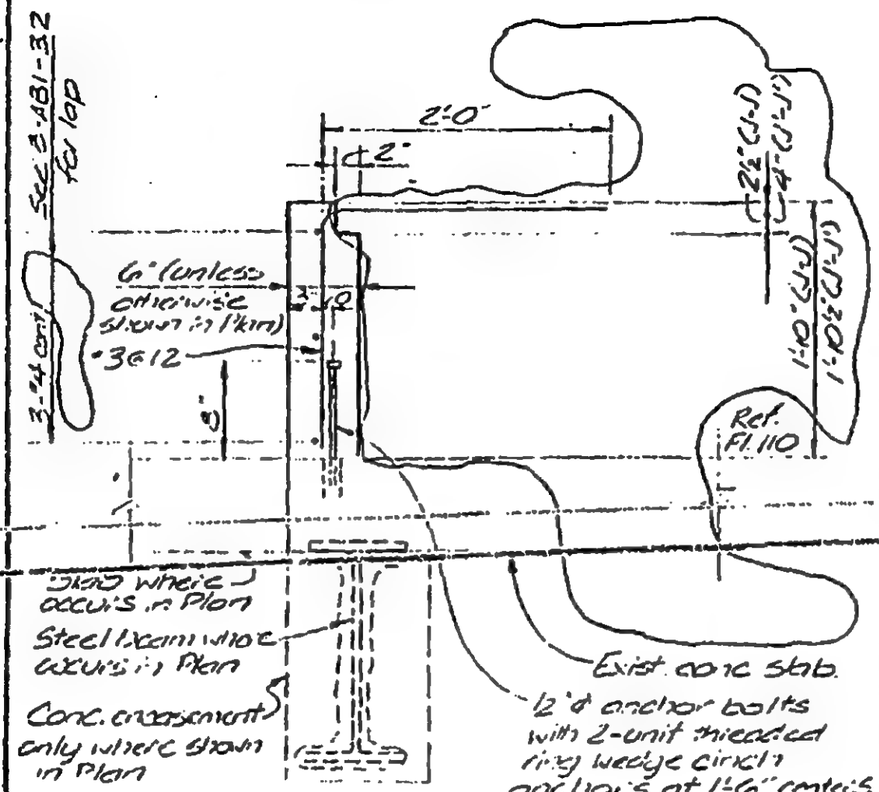

Section J-J

Section J'-J'

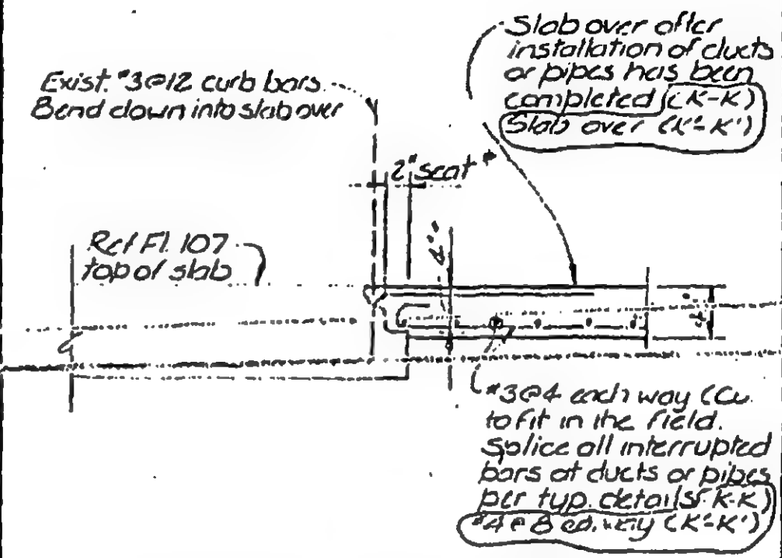

* Cut 2"x4" seat as shown without damaging existing reinforcing. Clean & roughen entire surface of existing concrete at joint prior to casting new concrete

Section K-K

Section K'-K'

LICENSED PROFESSIONAL ENGINEER — LESLIE E. ROBERTSON — No. 34980 — UNIVERSITY OF THE STATE OF NEW YORK

DESIGNED: JTM

DRAWN: J Bach

REVIEWED:

B-AB10-1.7

SKILLING, HELLE, CHRISTIANSEN, ROBERTSON — Structural & Civil Engineers

PROJECT: THE WORLD TRADE CENTER | TITLE: TYPICAL DETAILS-CORE AREA - FLOOR 107 | DATE: 9-12-73

REVISIONS

7-12-74

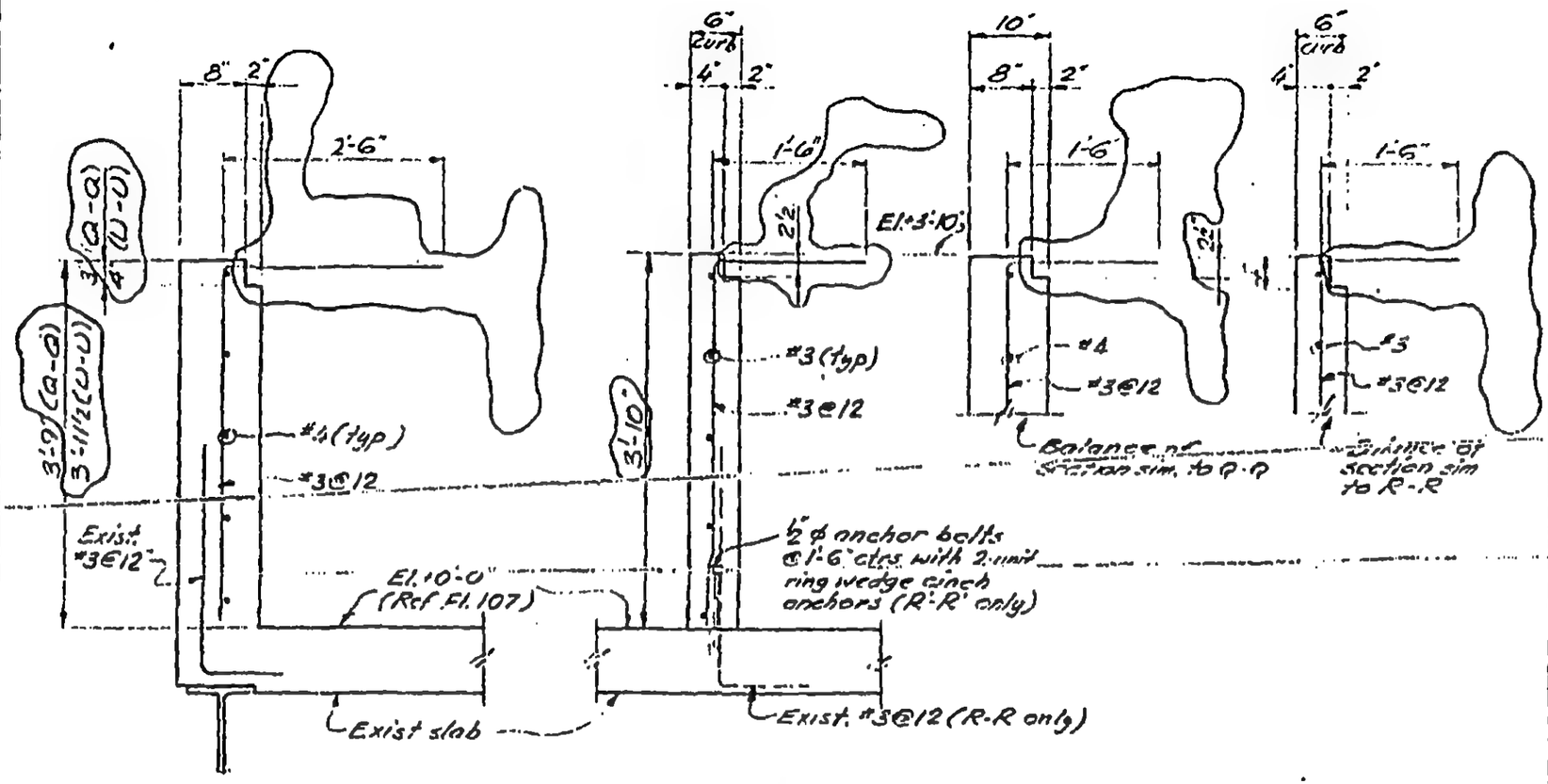

Section Q-Q / Section U-U

Section R-R / Section R'-R'

Section S-S

Section T-T

LICENSED PROFESSIONAL ENGINEER — LESLIE E. ROBERTSON — NO. 34340 — UNIVERSITY OF THE STATE OF NEW YORK

DESIGNED: J T M

DRAWN: J G

CHECKED:

S-AB10-1.9

SKILLING, HELLE, CHRISTIANSEN, ROBERTSON | Structural & Civil Engineers

PROJECT: THE WORLD TRADE CENTER | TITLE: SECTIONS AT CORE AREA-FLOOR 107 | DATE: 11-23-70

REVISIONS

6-16-72

7-27-73 (As built)

9-12-73

7-12-74

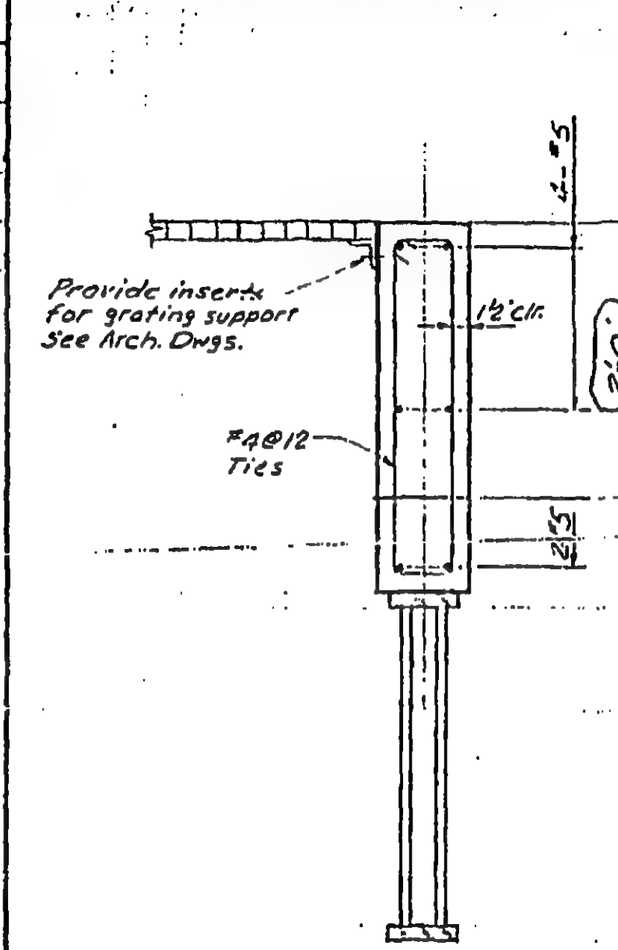

Section A-A

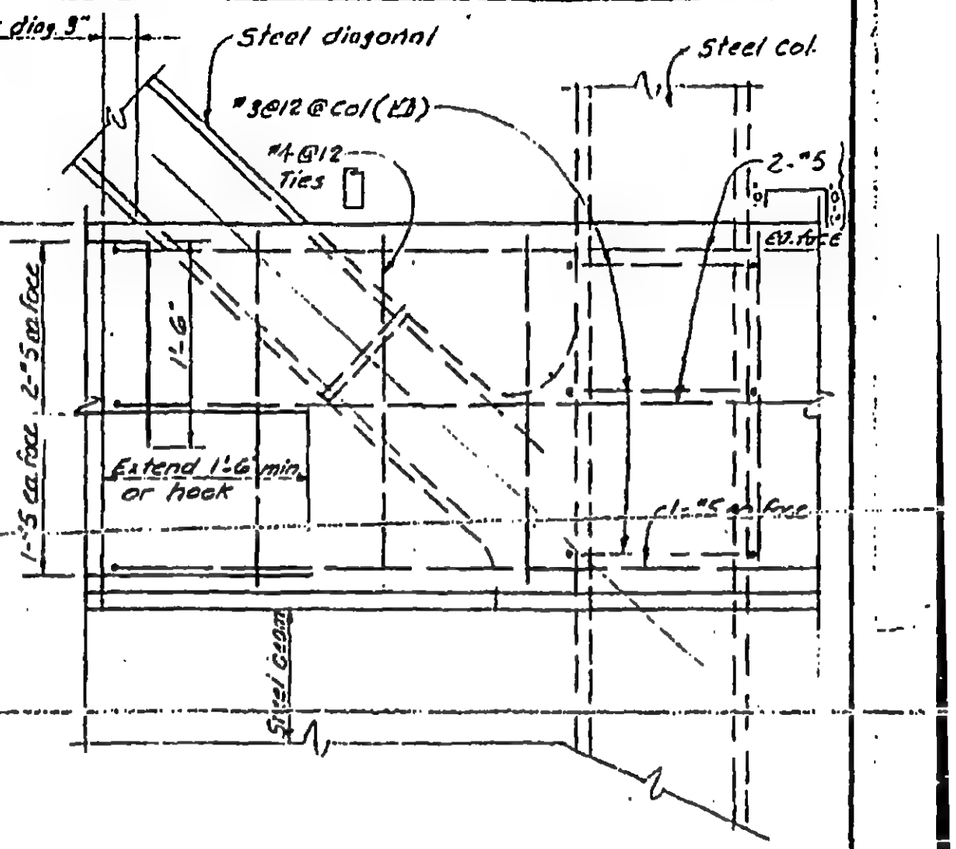

Section B-B

LICENSED PROFESSIONAL ENGINEER LESLIE E. ROBERTSON No. 34340 UNIVERSITY OF THE STATE OF NEW YORK

DESIGNED L. QUIRKO

DRAWN A. FRANQUI

CHECKED

8-AB10-2.1

SKILLING HELLE CHRISTIANSEN ROBERTSON — Structural & Civil Engineers

PROJECT: THE WORLD TRADE CENTER | TITLE: SECTIONS AT CORE AREA - FLOOR 107 | DATE: 11-25-70

REVISIONS
3-1-71
6-16-72
7-27-73 (As built)
9-12-73
7-12-74

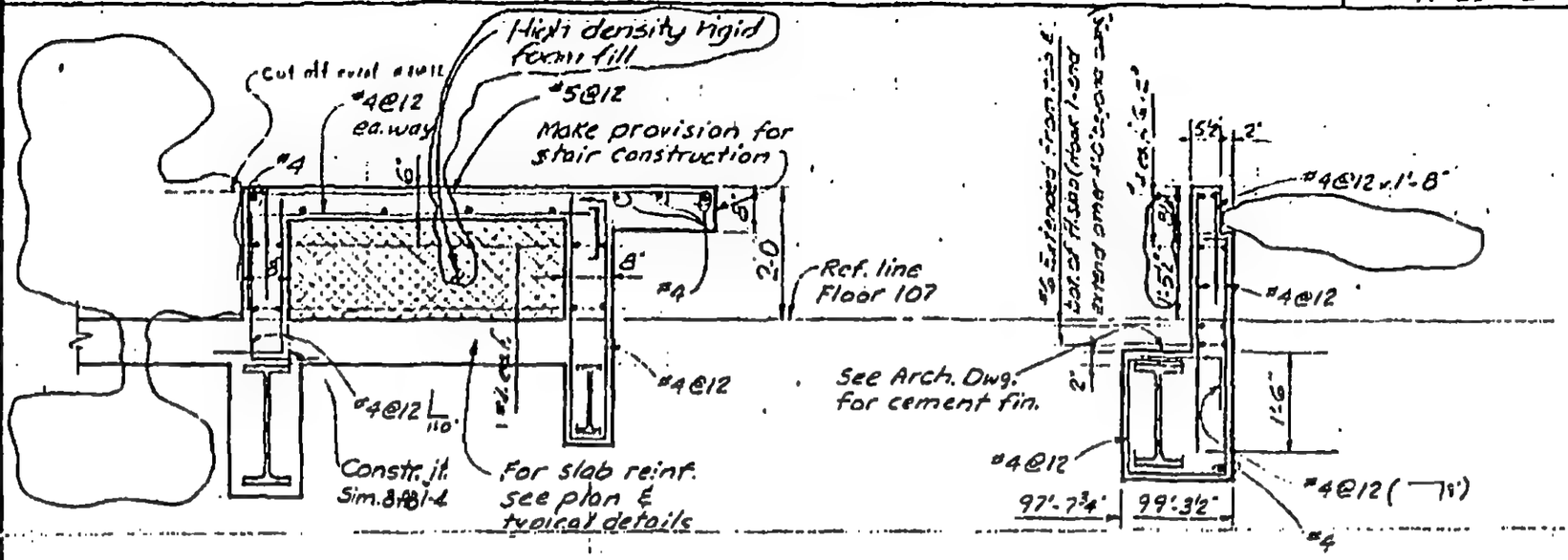

Section C-C

Section D-D

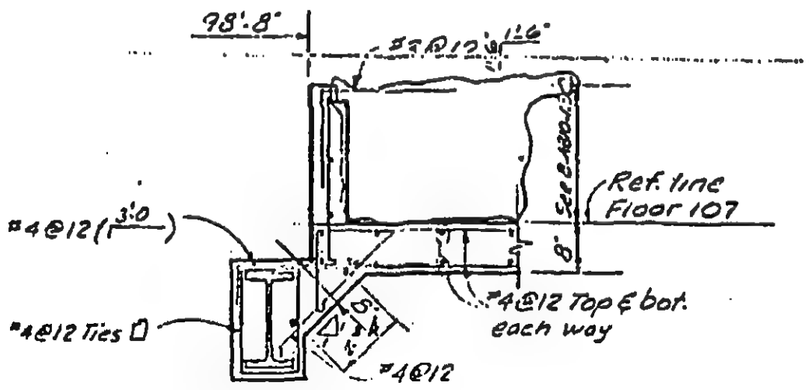

Section E-E

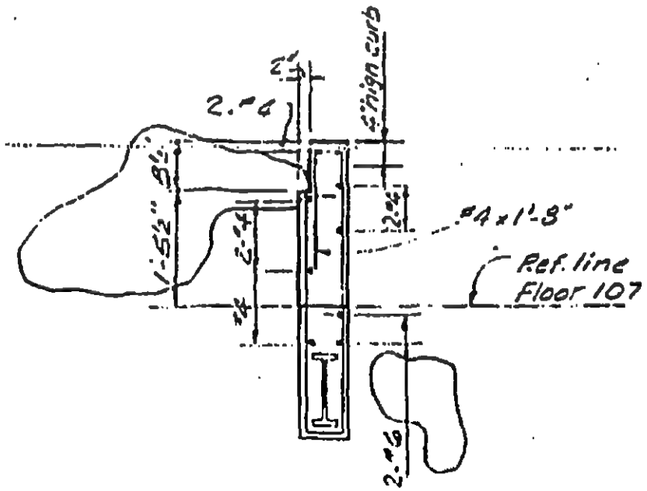

Section F-F

DESIGNED L. QUIRKO
DRAWN A. FRANQUI

LICENSED PROFESSIONAL ENGINEER — LESLIE E ROBERTSON — NO 34360 — UNIVERSITY OF THE STATE OF NEW YORK

S-AB10-2.2

SKILLING, HELLE, CHRISTIANSEN, ROBERTSON — Structural & Civil Engineers

PROJECT: THE WORLD TRADE CENTER

TITLE: SECTIONS AT CORE AREA - FLOOR 107

DATE: 11-23-70

REVISIONS

6-16-72

7-27-73 (As built)

9-12-73

10-4-73

7-12-74

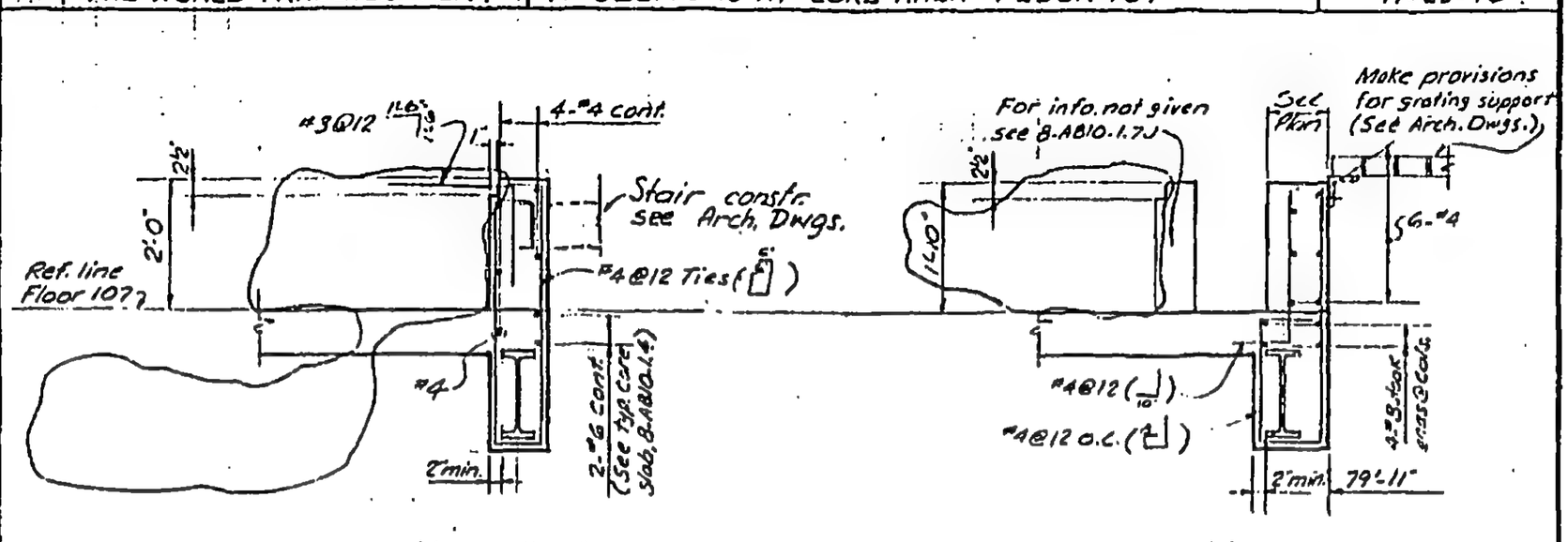

Section G-G

Section H-H

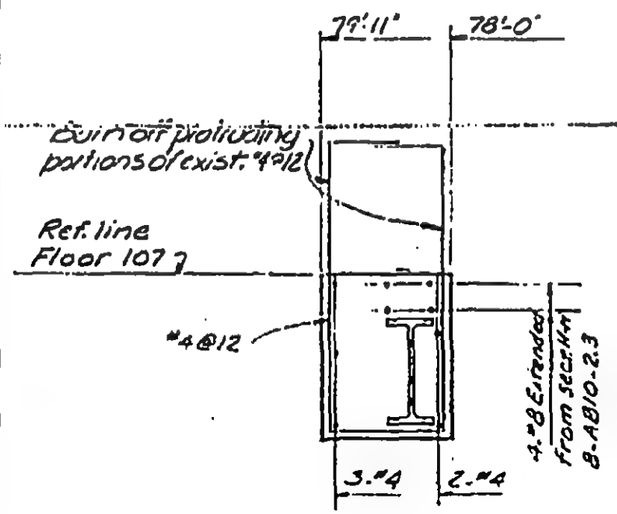

Section K-K

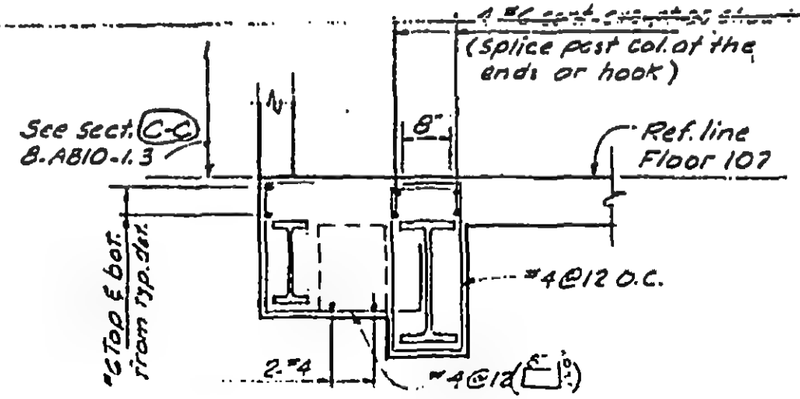

Section L-L

Note:
For slab reinf. see plan & 8-AB10-1.4

8-AB10-2.3

LICENSED PROFESSIONAL ENGINEER — LESLIE E. ROBERTSON — UNIVERSITY OF THE STATE OF NEW YORK — NO. 34960

DESIGNED L. QUIRKO

DRAWN A. FRANQUI

REVISED

SKILLING, HELLE, CHRISTIANSEN, ROBERTSON — Structural & Civil Engineers

PROJECT THE WORLD TRADE CENTER | TITLE SECTIONS AT CORE AREA - FLOOR 107 | DATE 9-12-73

REVISIONS
7-12-74

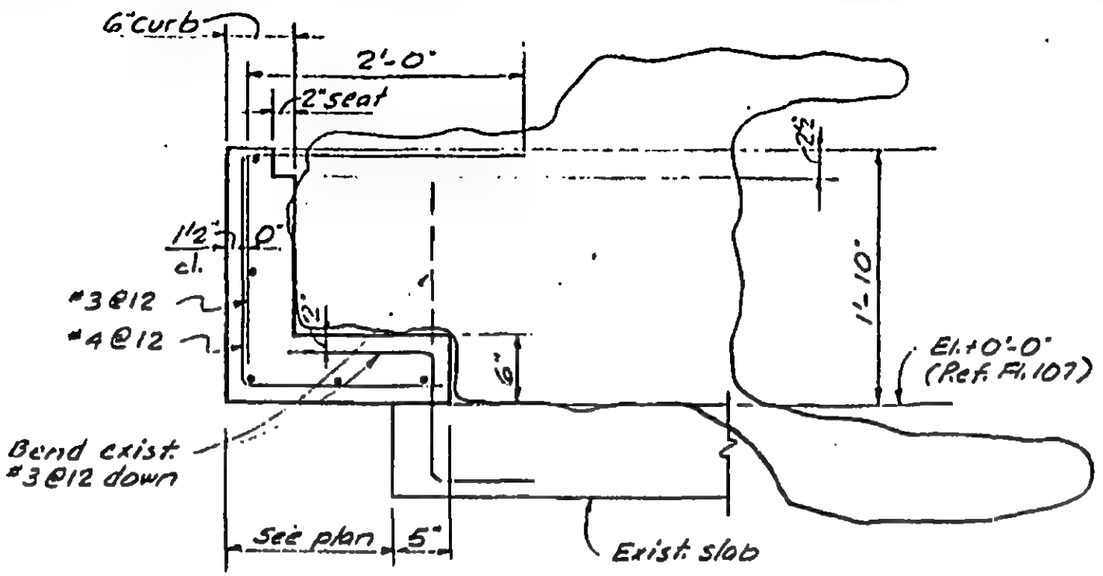

Section M-M

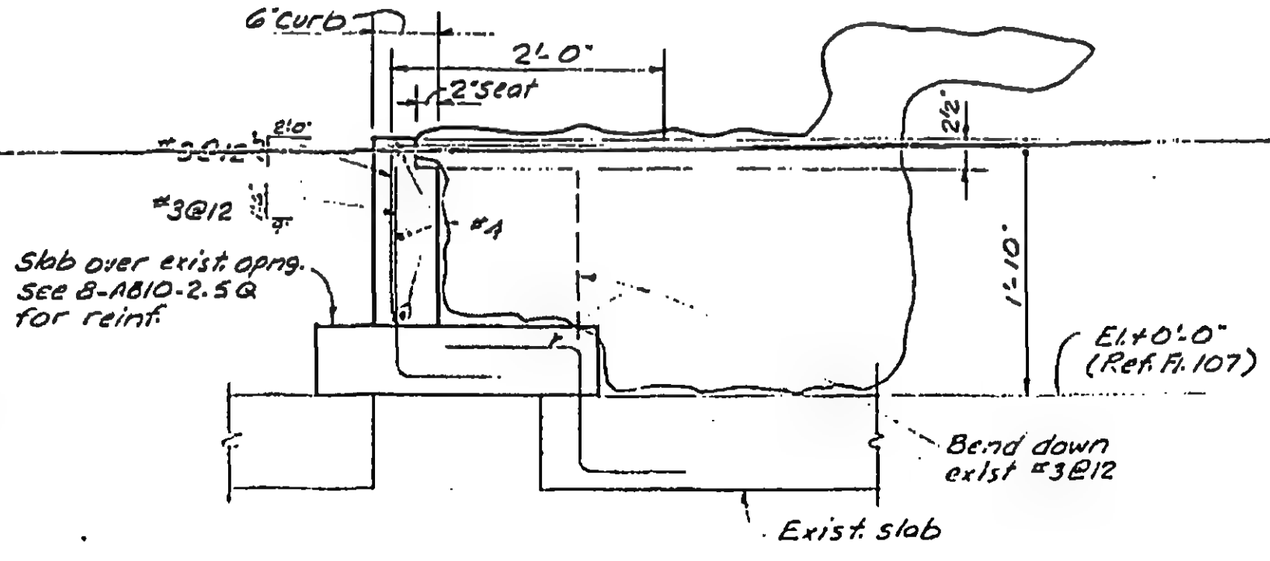

Section N-N

LICENSED PROFESSIONAL ENGINEER LESLIE E. ROBERTSON No. 34380 UNIVERSITY OF THE STATE OF NEW YORK

DESIGNED JTM
DRAWN ALF
REVIEWED

S-AB10-2.4

SKILLING, HELLE, CHRISTIANSEN, ROBERTSON — Structural & Civil Engineers

PROJECT: THE WORLD TRADE CENTER | TITLE: SECTIONS AT CORE AREA - FLOOR 107 | DATE: 9-12-73

REVISIONS: 7-12-74

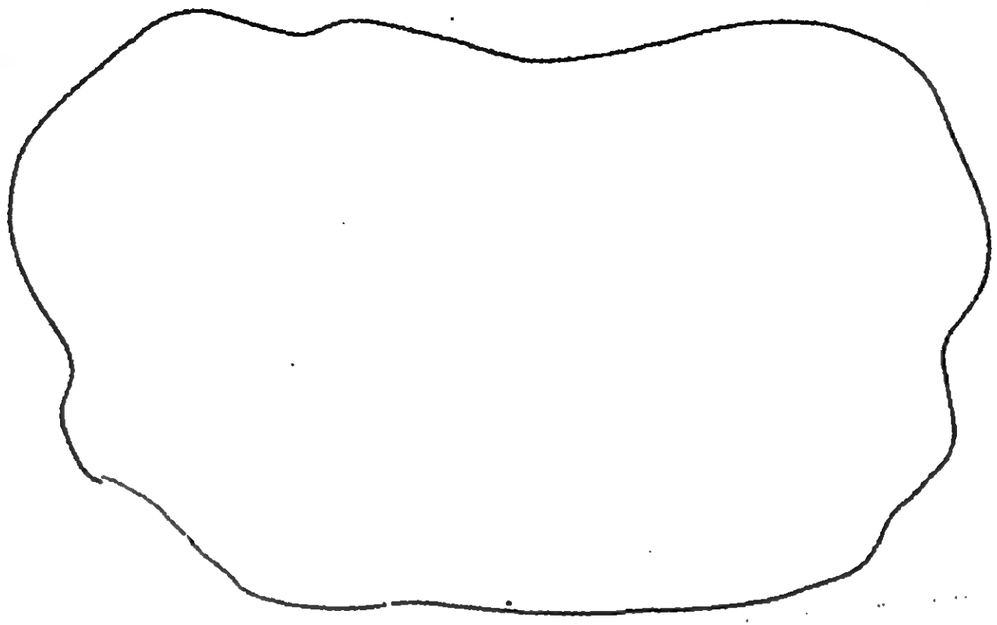

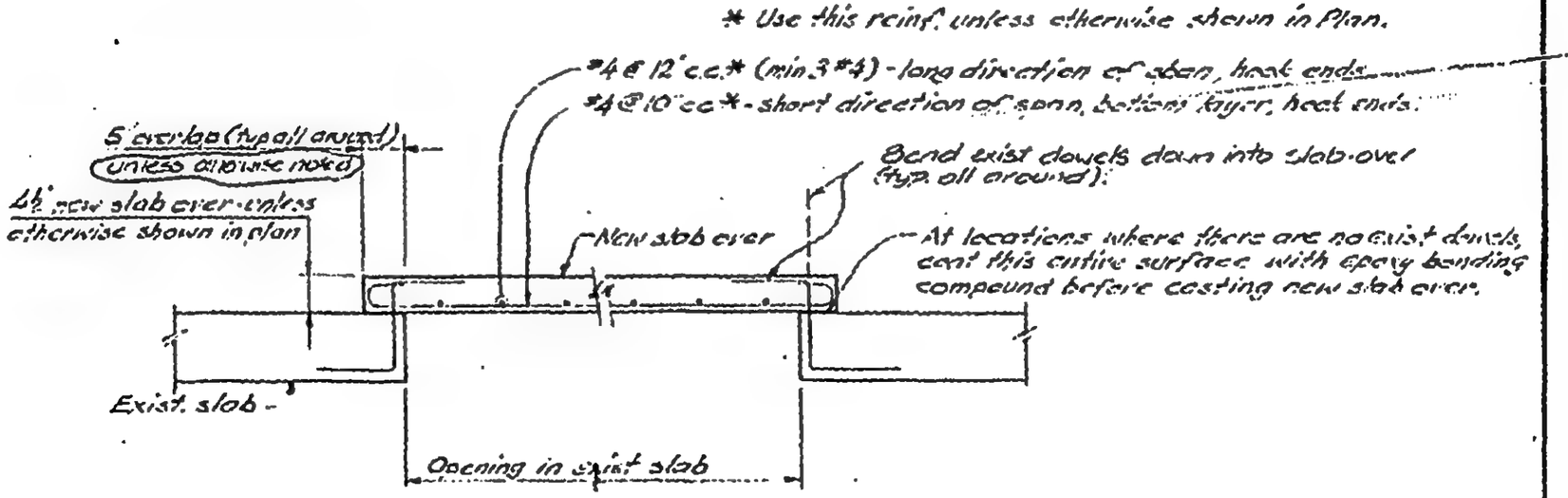

Section Q-Q

LICENSED PROFESSIONAL ENGINEER — LESLIE E. ROBERTSON — No 34380 — UNIVERSITY OF THE STATE OF NEW YORK

DESIGNED: J.T.M.

DRAWN: J.G.

REVIEWED: WB

S-AB10-2.5

SKILLING, HELLE, CHRISTIANSEN, ROBERTSON — Structural & Civil Engineers

PROJECT: THE WORLD TRADE CENTER | TITLE: SECTIONS AT CORE AREA - FLOOR 107 | DATE: 9-12-73

REVISIONS
10-4-73
7-12-74

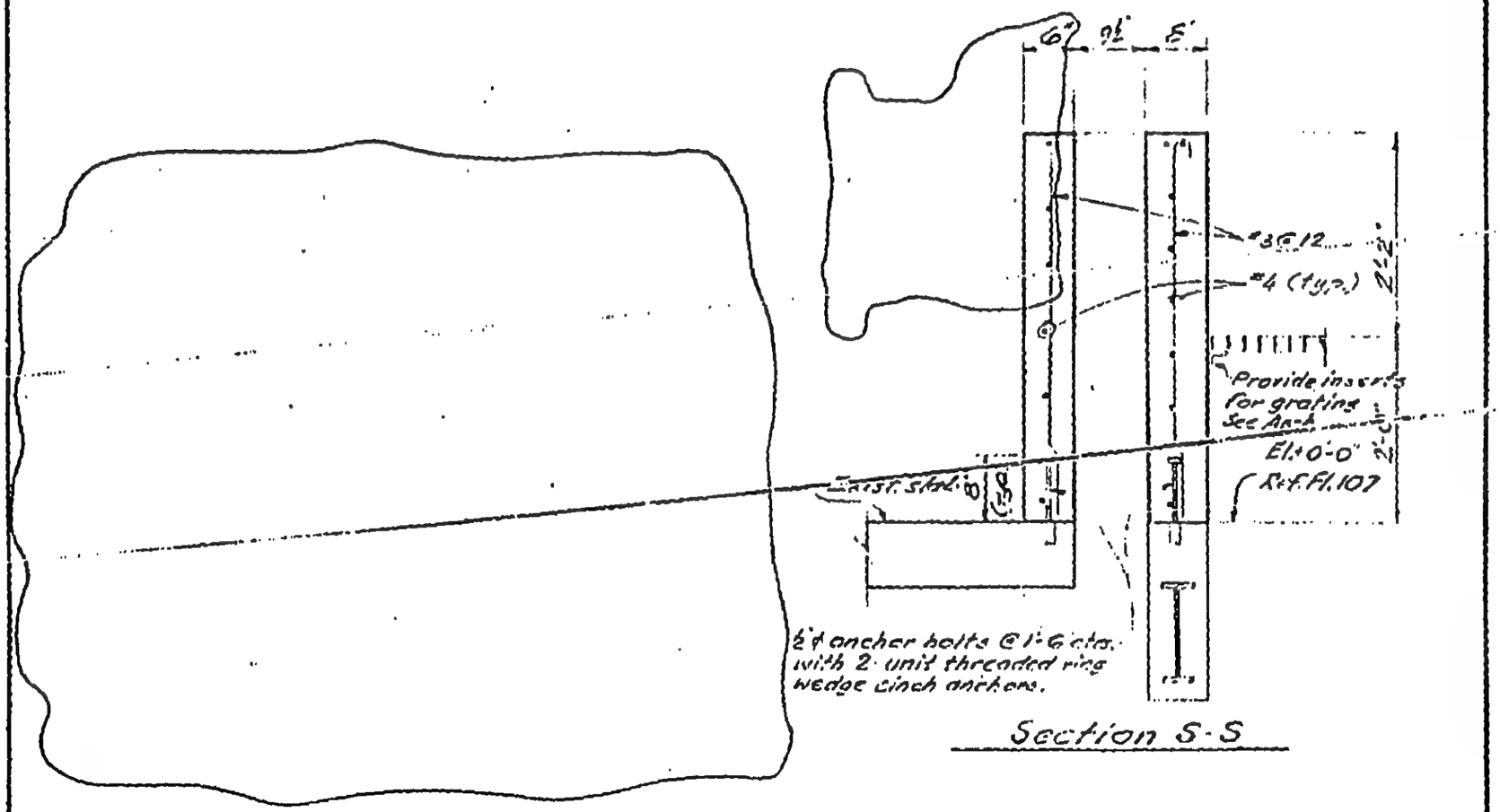

Section S-S

LICENSED PROFESSIONAL ENGINEER
LESLIE E. ROBERTSON
No. 36360
STATE OF NEW YORK

DESIGNED J.T.M.
DRAWN J.G.
REVIEWED

S-AR.10-2.6

SKILLING, HELLE, CHRISTIANSEN, ROBERTSON — Structural & Civil Engineers

PROJECT: THE WORLD TRADE CENTER | TITLE: SECTIONS AT CORE AREA - FLOOR 107 | DATE: 9-12-73

REVISIONS
10-4-73
7-12-74

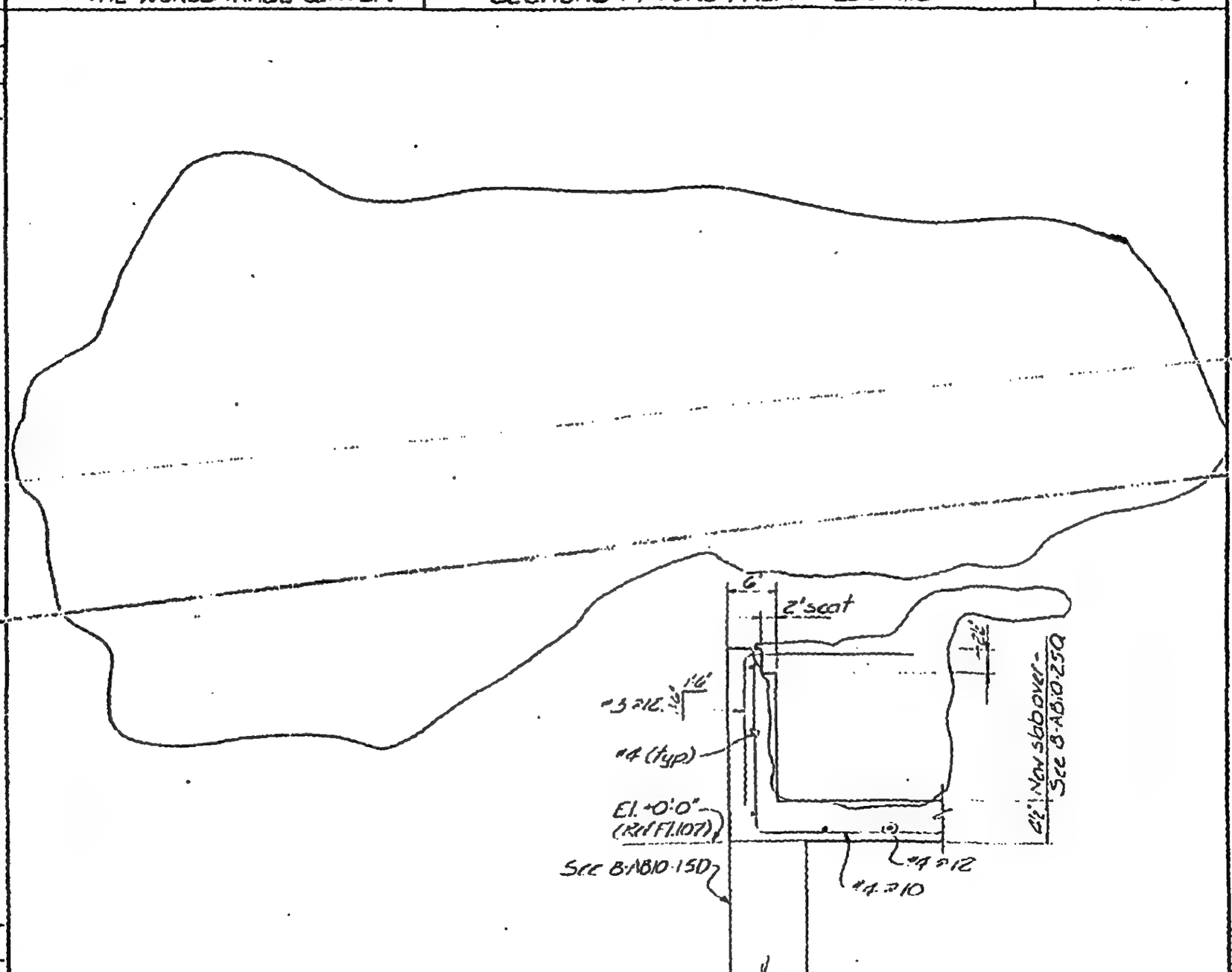

Section W-W

8-AB10-2.7

LICENSED PROFESSIONAL ENGINEER
LESLIE E. ROBERTSON
No. 34360
UNIVERSITY OF THE STATE OF NEW YORK

DESIGNED JTM
DRAWN J Burke
REVIEWED JTM.

SKILLING, HELLE, CHRISTIANSEN, ROBERTSON — Structural & Civil Engineers

PROJECT: THE WORLD TRADE CENTER | TITLE: SECTIONS AT DUMBWAITER - FLOOR 106 | DATE: 11-9-73

REVISIONS

6-27-74

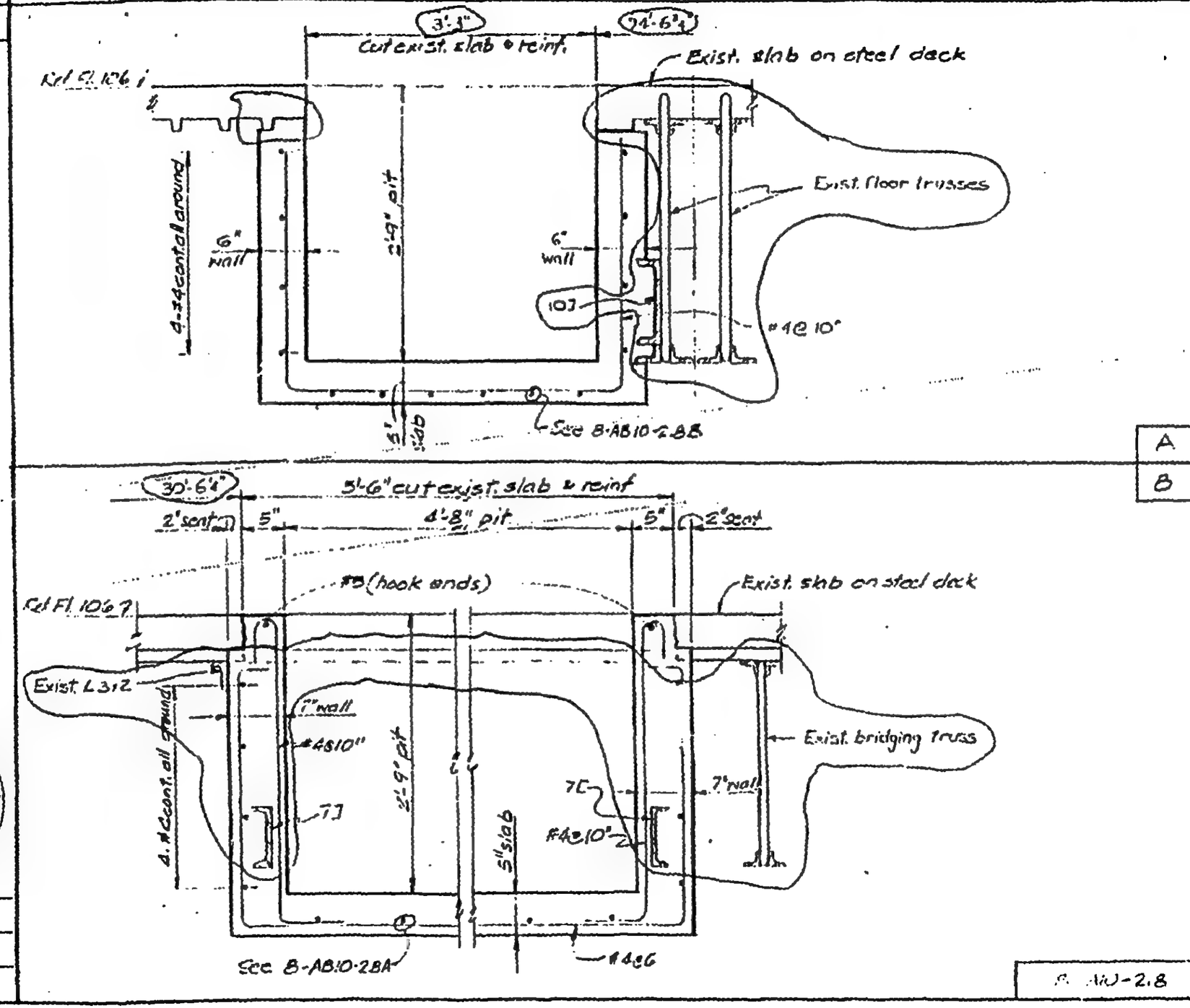

LICENSED PROFESSIONAL ENGINEER — LESLIE E. ROBERTSON — No. 34380 — UNIVERSITY OF THE STATE OF NEW YORK

DESIGNED: JTM

DRAWN: [illegible]

REVIEWED: [illegible]

8-AB10-2.8

SKILLING, HELLE, CHRISTIANSEN, ROBERTSON — Structural & Civil Engineers

PROJECT THE WORLD TRADE CENTER | TITLE CONCRETE SECTIONS - RAISED LEVEL FLOOR 107 | DATE 11-9-73

REVISIONS

6-27-74

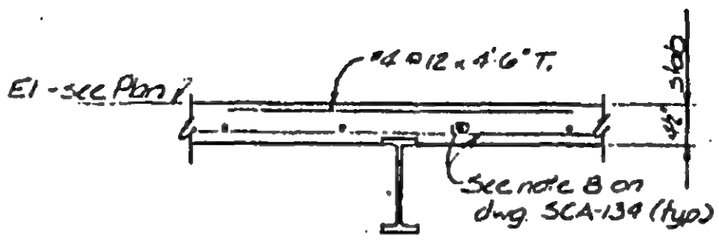

A

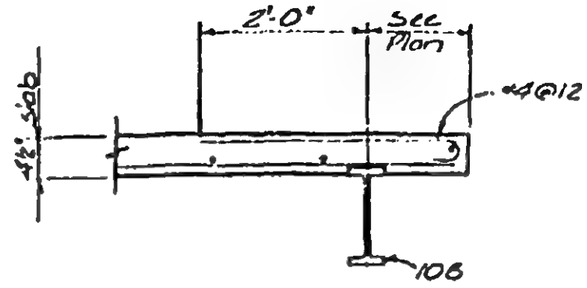

B

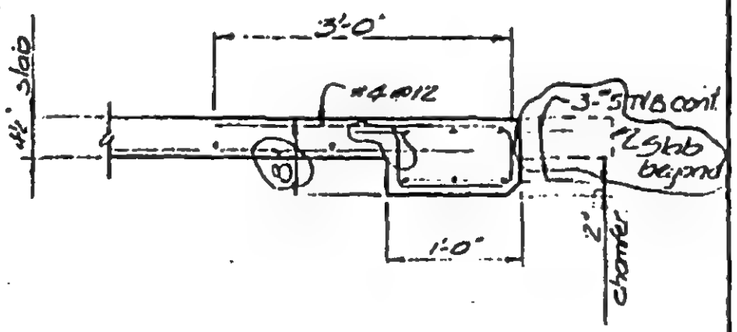

C

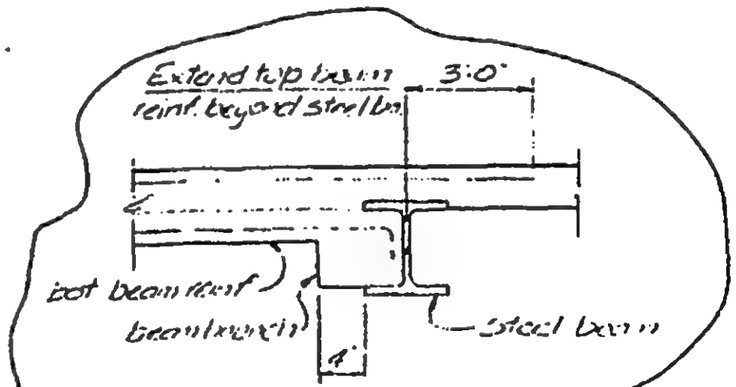

E

DESIGNED JTM

DRAWN [illegible]

CHECKED WAB

S-10-2.10

SKILLING, HELLE, CHRISTIANSEN, ROBERTSON — Structural & Civil Engineers

PROJECT THE WORLD TRADE CENTER | TITLE CONCRETE SECTIONS RAISED LEVEL FLOOR(107) | DATE 11-9-73

REVISIONS
12-28-73
6-27-74
7-12-74

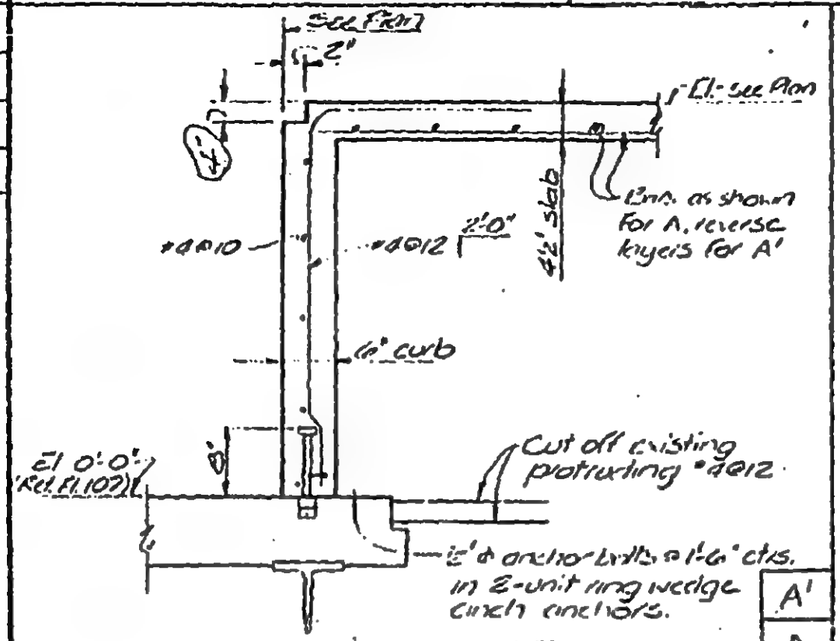

A' / A

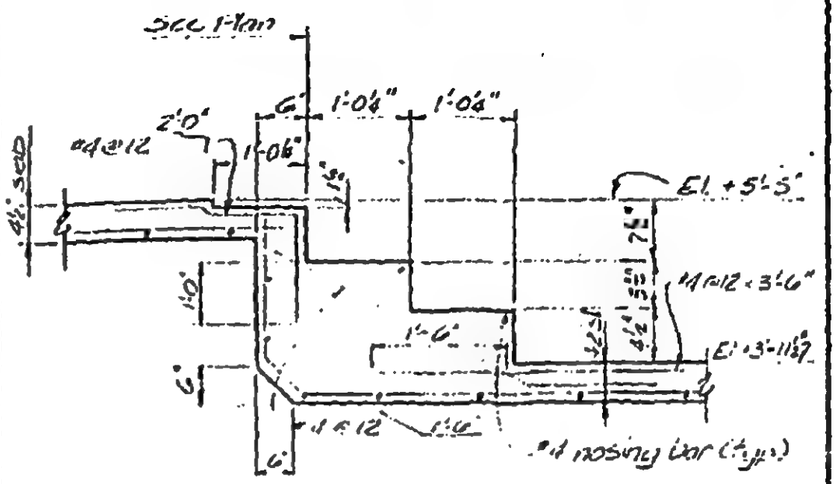

B

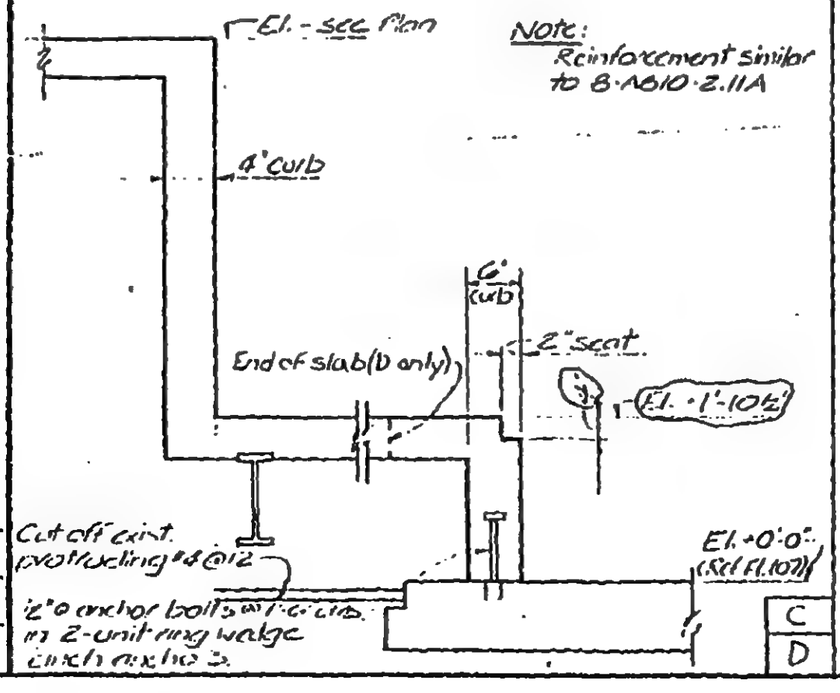

C / D

LICENSED PROFESSIONAL ENGINEER — LESLIE E. ROBERTSON — NO. 34380 — STATE OF NEW YORK

DRAWN J.T.M

B-A10-2.11

SKILLING, HELLE, CHRISTIANSEN, ROBERTSON — Structural & Civil Engineers

PROJECT THE WORLD TRADE CENTER | TITLE CONCRETE SECTIONS - INTERMEDIATE LEVEL FL. 107 | DATE 11-9-73

REVISIONS

6-27-74

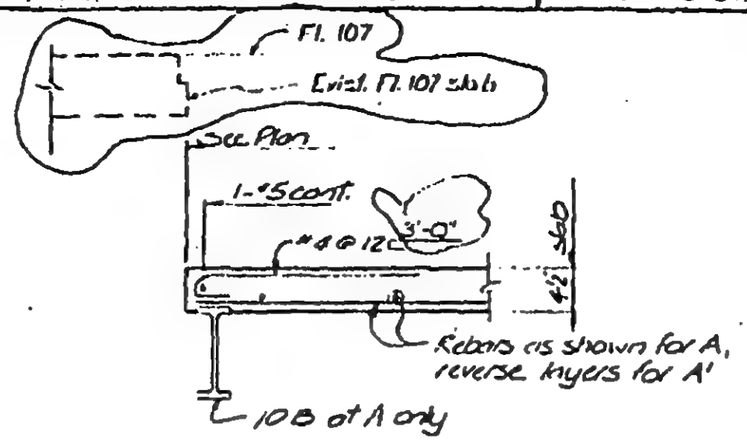

A

A'

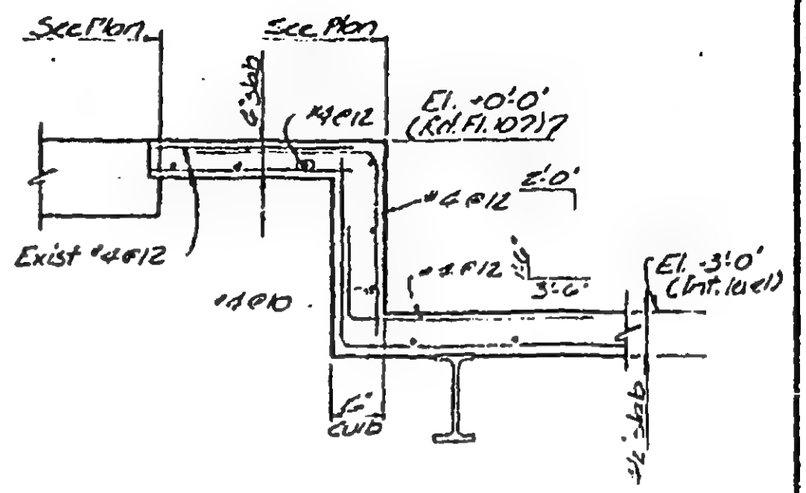

B

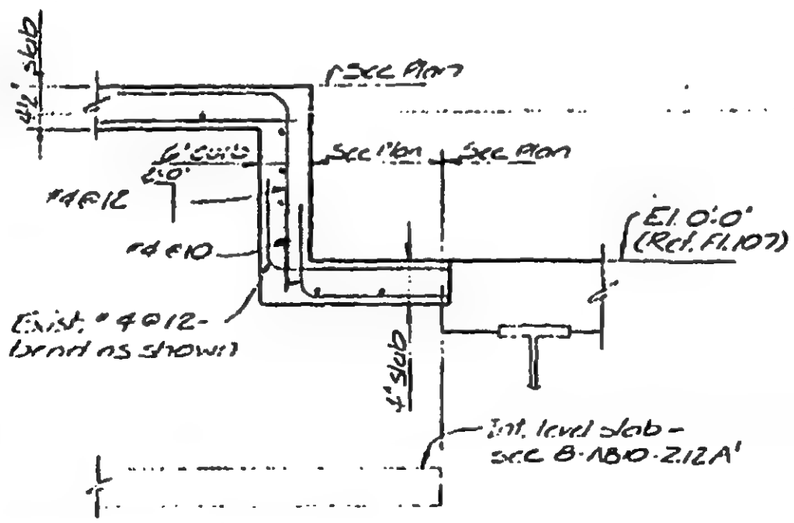

C

LICENSED PROFESSIONAL ENGINEER — LESLIE E. ROBERTSON — No. 34980 — STATE OF NEW YORK

DESIGNED J.T.M.

DRAWN J.B.

CHECKED WAP

B-A 10-2.12

SKILLING, HELLE, CHRISTIANSEN, ROBERTSON — Structural & Civil Engineers

PROJECT THE WORLD TRADE CENTER | TITLE TYPICAL SLAB DETAILS - FLOOR AREA - FL 107 | DATE 1/23/70

REVISIONS

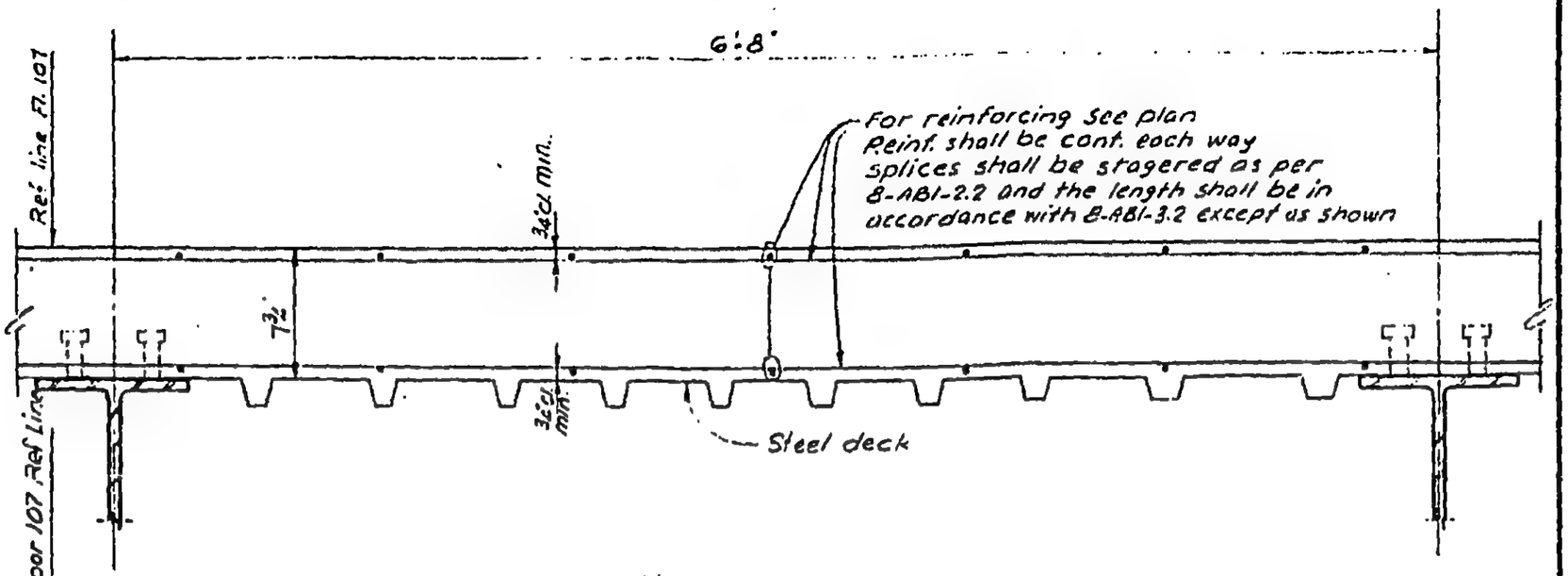

Section A-A

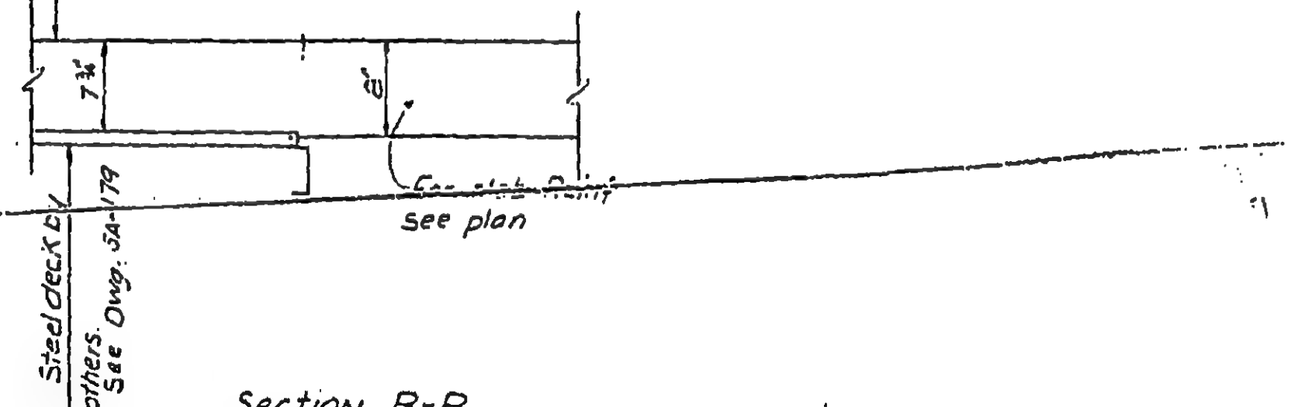

Section B-B

(Typical @ Transition between timber forms & Steel Deck)

LICENSED PROFESSIONAL ENGINEER LESLIE E. ROBERTSON No. 34380 UNIVERSITY OF THE STATE OF NEW YORK

DESIGNED

DRAWN T. Terrelonge

REVIEWED

8-AB10-3.1

SKILLING, HELLE, CHRISTIANSEN, ROBERTSON — Structural & Civil Engineers

PROJECT: THE WORLD TRADE CENTER | TITLE: CONCRETE SLAB SECTIONS - FLOOR AREA - FLOOR 107 | DATE: 11/23/70

REVISIONS

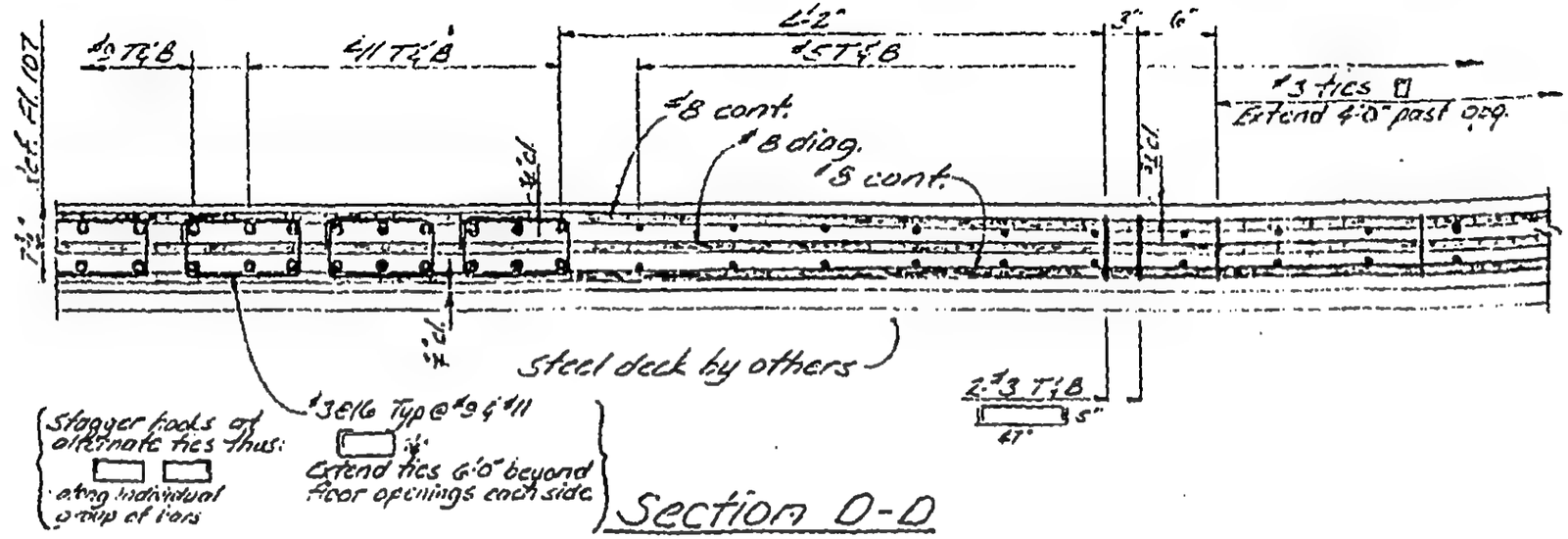

Section D-D

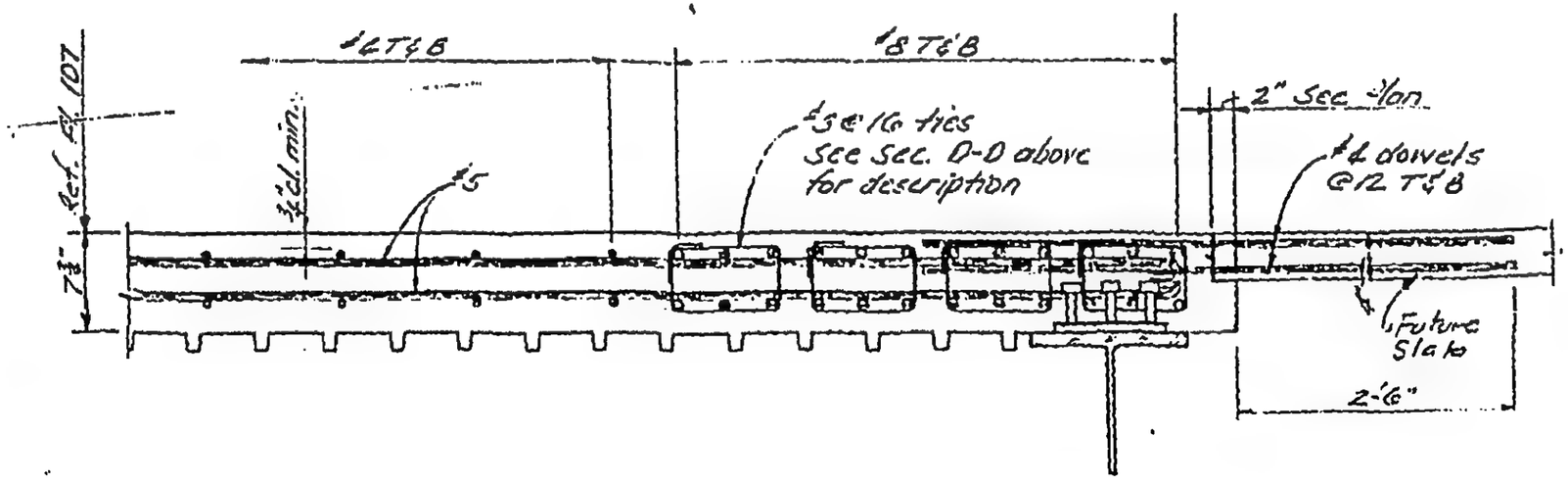

Section E-E

LICENSED PROFESSIONAL ENGINEER — LESLIE E. ROBERTSON — No. 34380 — UNIVERSITY OF THE STATE OF NEW YORK

DESIGNED

DRAWN

REVIEWED

8-AE10-32

SKILLING, HELLE, CHRISTIANSEN, ROBERTSON — Structural & Civil Engineers

PROJECT: THE WORLD TRADE CENTER | TITLE: CONCRETE SLAB SECTIONS - FLOOR AREA - FLOOR 107 | DATE: 11/23/70

REVISIONS

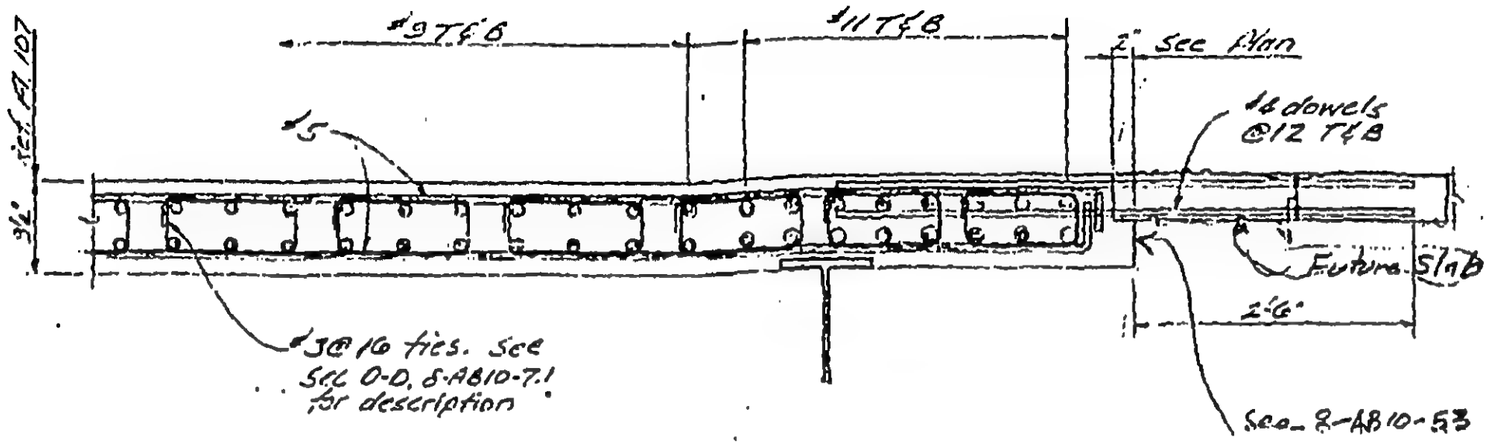

Section F-F

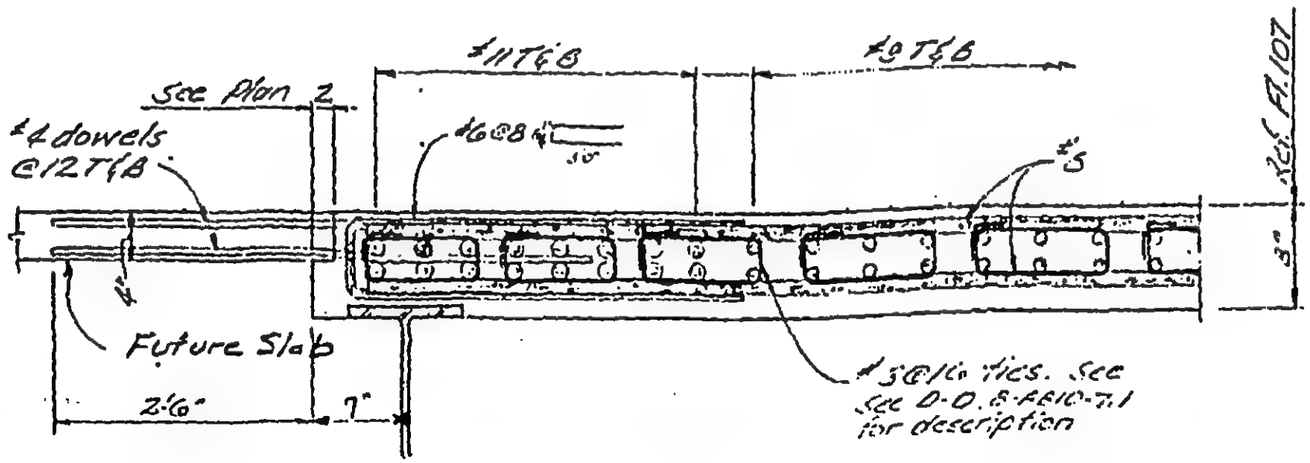

Section G-G

LICENSED PROFESSIONAL ENGINEER — LESLIE E. ROBERTSON — No. 34360 — UNIVERSITY OF THE STATE OF NEW YORK

S-AB10-3.3

SKILLING, HELLE, CHRISTIANSEN, ROBERTSON — Structural & Civil Engineers

PROJECT THE WORLD TRADE CENTER | TITLE CONSTRUCTION JOINT LAYOUT - FLOOR 107 | DATE 11/23/70

REVISIONS

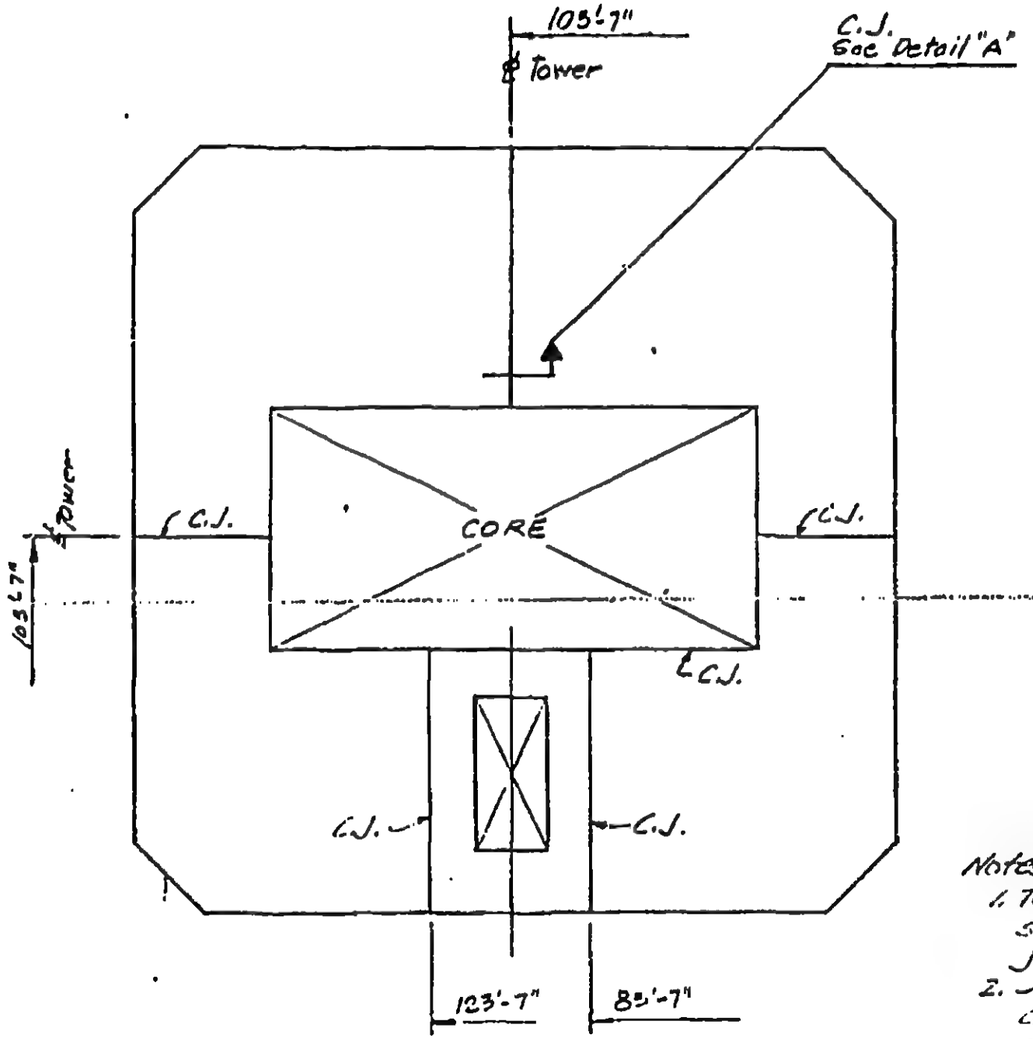

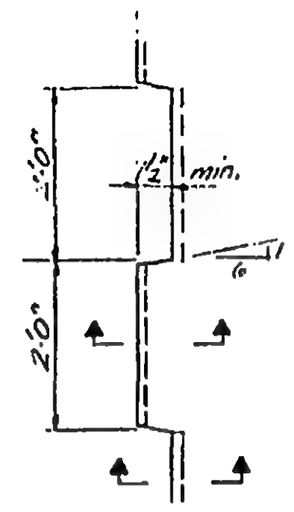

Plan

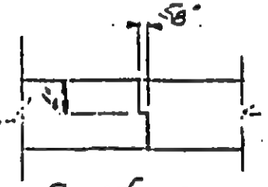

Section
Detail "A"

Notes:
1. Top and bottom reinforcement shall be continuous thru joints.
2. Joints to be thoroughly cleaned of loose material and coated with holding agent prior to completion

LICENSED PROFESSIONAL ENGINEER · LESLIE E. ROBERTSON · No 34380 · UNIVERSITY OF THE STATE OF NEW YORK

REVISED

REVISED

8-AB10-4.1

SKILLING, HELLE, CHRISTIANSEN, ROBERTSON — Structural & Civil Engineers

PROJECT THE WORLD TRADE CENTER | TITLE SECTIONS AT CORE AREA - FLOOR 107 | DATE 10-18-74

REVISIONS

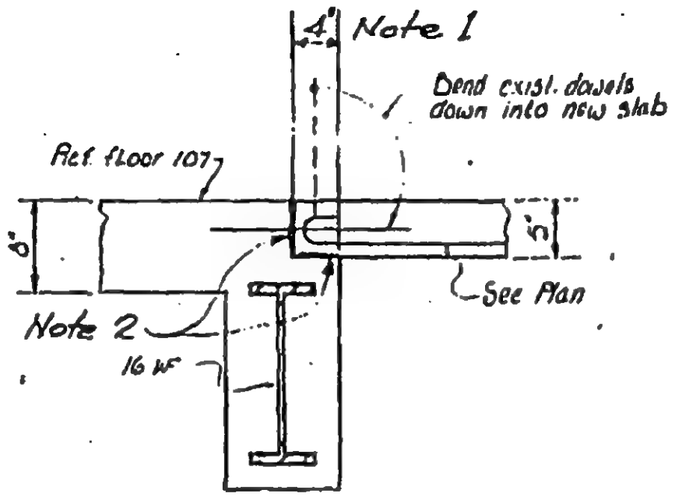

A

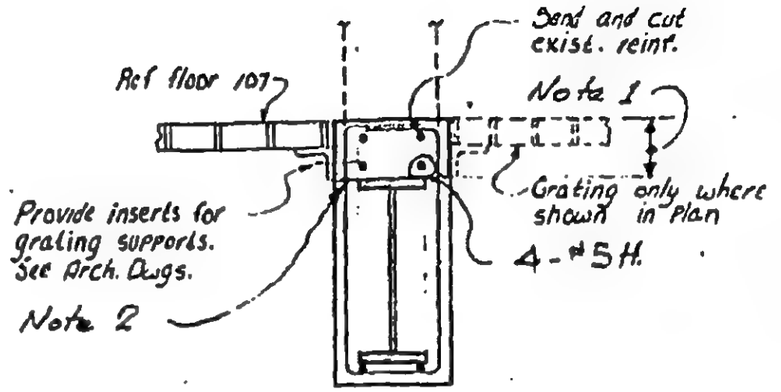

B

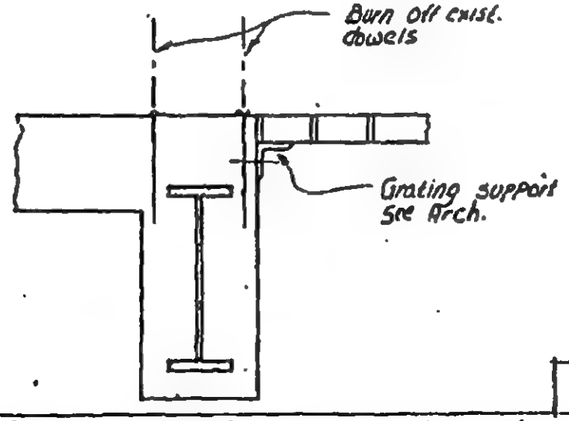

C

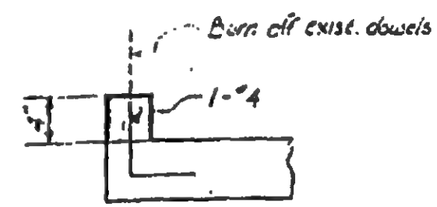

D

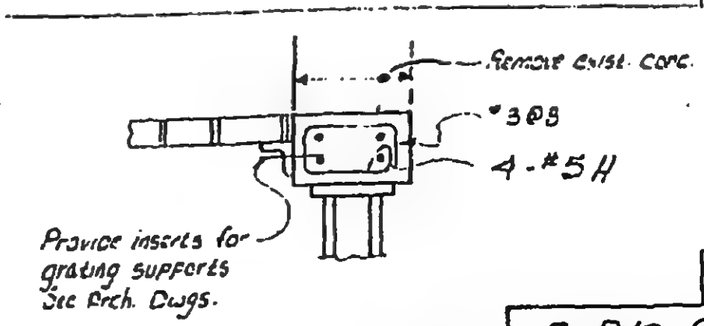

E

Note 1- Remove existing concrete without damage to existing reinforcing.
Note 2- Clean face of existing concrete and thoroughly coat entire surface with epoxy bonding compound.

LICENSED PROFESSIONAL ENGINEER LESLIE E. ROBERTSON No 34360 UNIVERSITY OF THE STATE OF NEW YORK

DESIGNED JTM

DRAWN DESMOND TRAVIE

REVIEWED WOB

8-B10-9

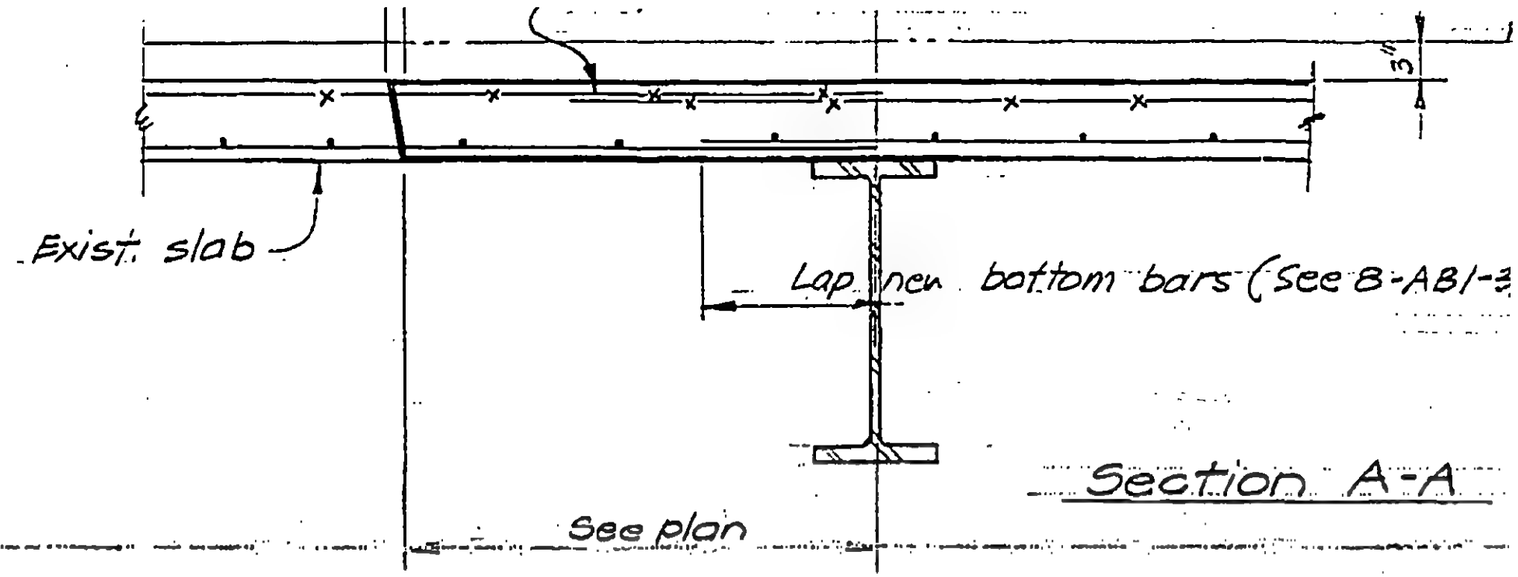

Section A-A

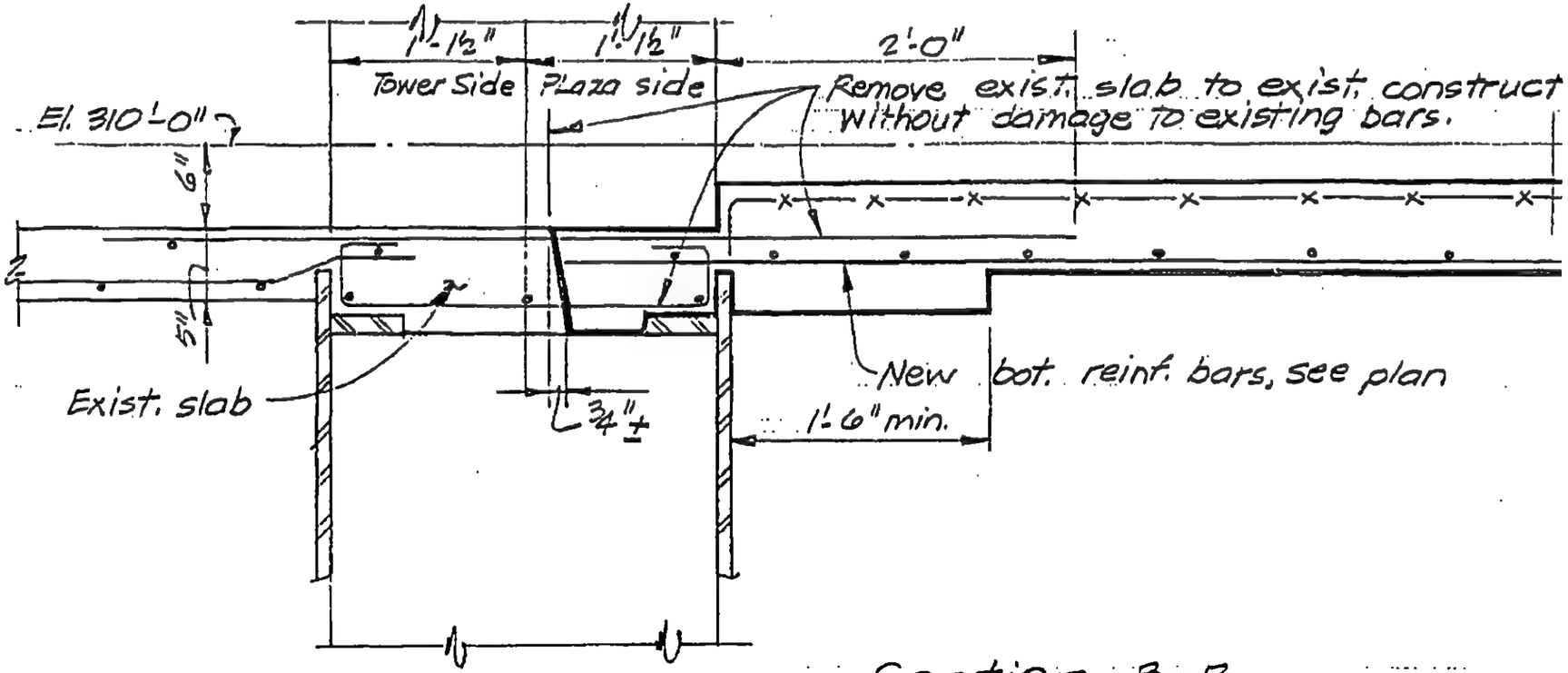

Section B-B

LICENSED PROFESSIONAL ENGINEER
LESLIE E. ROBERTSON
No. 34360
UNIVERSITY OF THE STATE OF NEW YORK

DESIGNED WAB

DRAWN

REVIEWED

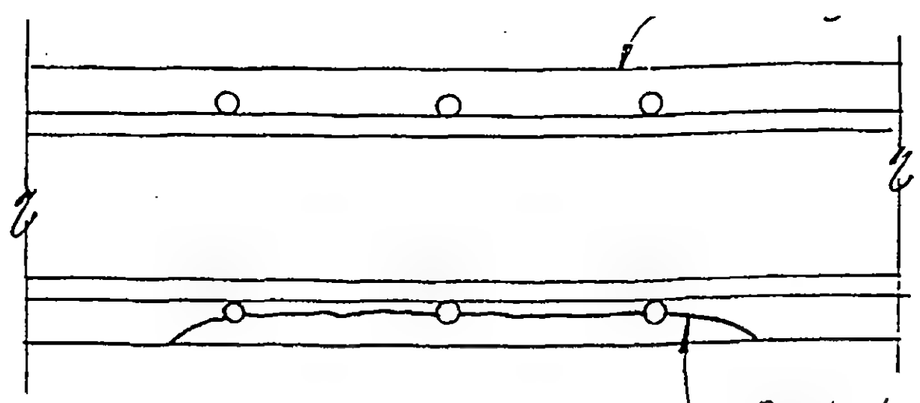

Bush hammer s
then buildout t
surfaces with
concrete.

Note : Repair to be accomplished in ar
indicated in plan as directed b
Engineer.

LICENSED PROFESSIONAL ENGINEER
LESLIE E. ROBERTSON
No. 34360
UNIVERSITY OF THE STATE OF NEW YORK

DESIGNED
WAB

DRAWN
PMMorelli

REVIEWED

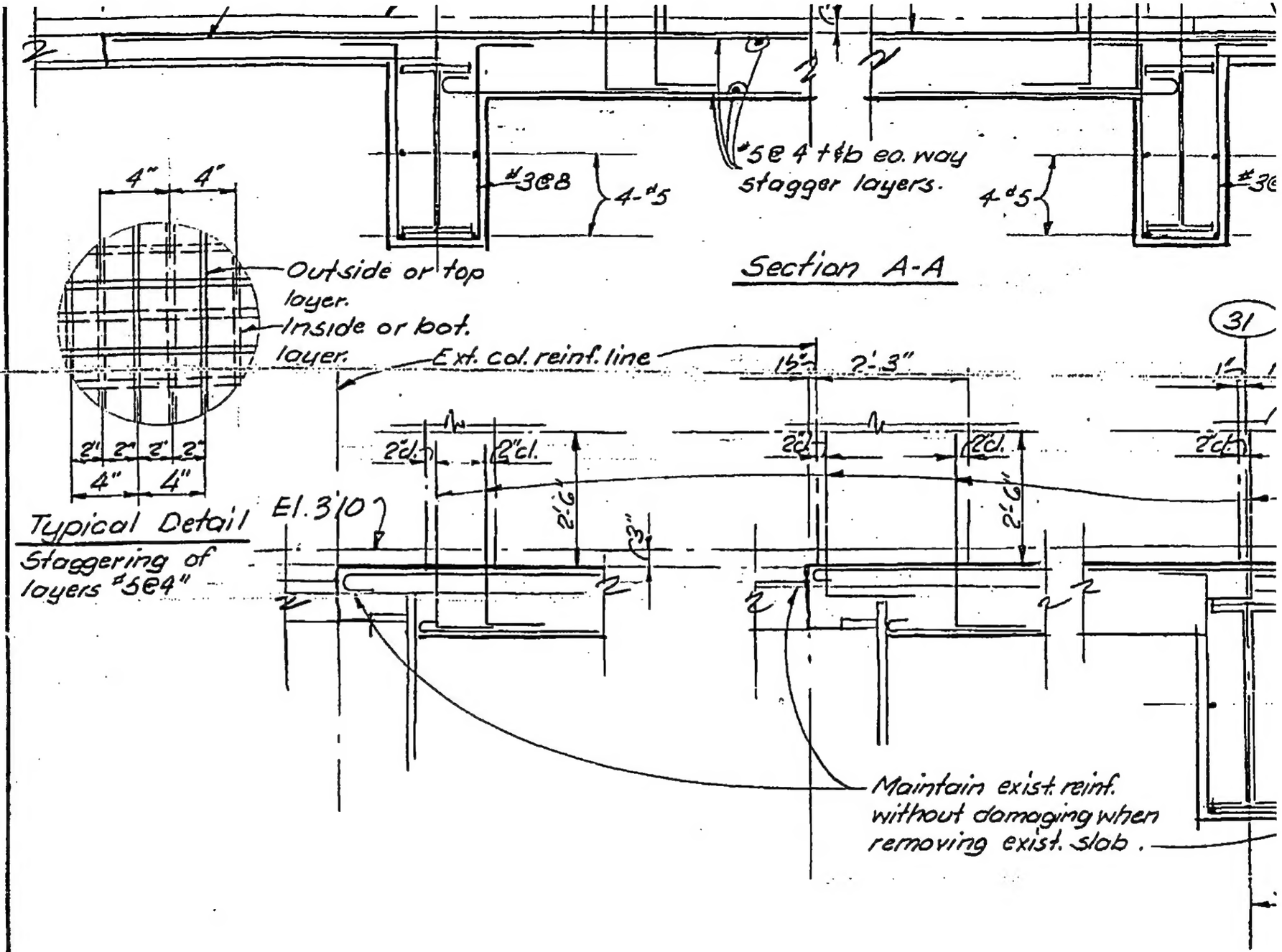

LICENSED PROFESSIONAL ENGINEER
LESLIE E. ROBERTSON
No. 34360
UNIVERSITY OF THE STATE OF NEW YORK

DESIGNED

DRAWN

REVIEWED
C.O. Brewer

PRINCETON DATAFILM INC.
PRINCETON SERVICE CENTER, U.S. 1, BOX 231, PRINCETON JUNCTION, N.J. 08550 (609) 799-1630

DATE FILMED

February 18, 1980

I hereby certify that the microphotographs appearing on this reel of film are true copies of the original document.

(signed) Lorraine Arold
Camera Operator

Date 2-18-80

Skilling

Helle,

Christiansen

Robertson, P.C.